Double Oven
Gas Cooker

AL60GAC

Please read this user manual first!

Dear Customer,
Thank you for purchasing this Leisure product. We hope that you get the best results from your product which has been manufactured with high quality and state-of-the-art technology. Therefore, please read this entire user manual and all other accompanying documents carefully before using the product and keep it as a reference for future use. If you handover the product to someone else, give the user manual as well. Follow all warnings and information in the user manual.
Remember that this user manual is also applicable for several other models. Differences between models will be identified in the manual.

Explanation of symbols

Throughout this user manual the following symbols are used:

Important information or useful hints about usage.

Warning of hazardous situations with regard to life and property.

Warning of electric shock.

Warning of risk of fire.

Warning of hot surfaces.

Arçelik A.Ş.
Karaağaç caddesi No:2-6
34445 Sütlüce/Istanbul/TURKEY
Made in TURKEY

CE

TABLE OF CONTENTS

1 Important instructions and warnings for safety and environment 4

Intended use....4
General safety....4
Safety when working with gas....5
Electrical safety....6
Product safety....7
Intended use....8
Safety for children....8
Disposing of the old product....9
Package information....9
Future Transportation....9

2 General information 10

Overview....10
Package contents....11
Technical specifications....12
Injector table....13

3 Installation 14

Before installation....14
Installation and connection....15
Gas conversion....17

4 Preparation 21

Tips for saving energy....21
Initial use....21
Time setting....21
First cleaning of the appliance....22
Initial heating....22

5 How to use the hob 23

General information about cooking....23
Using the hobs....23

6 How to operate the oven 25

General information on baking, roasting and grilling....25
How to use the gas oven....25
Cooking times table....26
How to operate the oven timer....27
How to use the program lock....28
How to use the alarm clock....28
How to operate the top oven with gas....28
Cooking times table....29
How to operate the gas grill - Top oven....30
Cooking times table....31

7 Maintenance and care 32

General information....32
Cleaning the hob....32
Cleaning the control panel....32
Cleaning the oven....32
Removing the upper oven door....33
Removing the door inner glass....33
Replacing the oven lamp....34

8 Troubleshooting 35

9 Guarantee and Service 36

1 Important instructions and warnings for safety and environment

This section contains safety instructions that will help protect from risk of personal injury or property damage. Failure to follow these instructions shall void any warranty.

Intended use

CAUTION

- This appliance is designed for cooking food (baking, roasting, grilling of food and defrosting) and is intended for indoor domestic household and static home use only.
- This appliance should not be used for any other purpose or in any other application, such as for non-domestic use or in a commercial environment.
- In addition this appliance is not suitable for use on any type of boat (offshore, inland waterway, canal boat or houseboat), caravans or motor homes.
- Incorrect installation environments will void the guarantee.
- This appliance should not be used for warming plates under the grill, drying towels, dish cloths etc. by hanging them on the oven door handles or for room heating purposes.
- The manufacturer shall not be liable for any damage caused by improper use or handling.

General safety

- This appliance can be used by children aged from 8 years and above and persons with reduced physical, sensory or mental capabilities or lack of experience and knowledge if they have been given supervision or instruction concerning use of the appliance in a safe way and understand the hazards involved.
  Children shall not play with the appliance. Cleaning and user maintenance shall not be made by children without supervision.
- Never place the product on a carpet-covered floor. Otherwise, lack of airflow beneath the product will cause electrical parts to overheat. This will cause problems with your product.
- Installation and repair procedures must always be performed by Authorized Service Agents. The manufacturer shall not be held responsible for damages arising from procedures carried out by unauthorized persons which may also void the warranty. Before

installation, read the instructions carefully.
- Do not operate the product if it is defective or has any visible damage.
- Ensure that the product function knobs are switched off after every use.

Safety when working with gas
- Any works on gas equipment and systems may only be carried out by authorised qualified persons who are Gas Safe registered.
- Prior to the installation, ensure that the local distribution conditions (nature of the gas and gas pressure) and the adjustment of the appliance are compatible.
- This appliance is not connected to a combustion products or evacuation device. It shall be installed and connected in accordance with current installation regulations. Particular attention shall be given to the relevant requirements regarding ventilation; See *Before installation, page 14*
- The use of gas cooking appliance results in the production of heat and moisture in the room in which it is installed. Ensure that the kitchen is well ventilated: keep natural ventilation holes open or install a mechanical ventilation device (mechanical extractor hood). Prolonged intensive use of the appliance may call for additional ventilation, for example increasing the level of the mechanical ventilation where present.
- Gas appliances and systems must be regularly checked for proper functioning. Regulator, hose and its clamp must be checked regularly and replaced within the periods recommended by its manufacturer or when necessary.
- Clean the gas burners regularly. The flames should be blue and burn evenly.
- Good combustion is required in gas appliances. In case of incomplete combustion, carbon monoxide (CO) might develop. Carbon monoxide is a colourless, odourless and very toxic gas, which has a lethal effect even in very small doses.
- Request information about gas emergency telephone numbers and safety measures in case of gas smell from you local gas provider.

What to do when you smell gas
- Do not use open flame or do not smoke. Do not operate any electrical buttons (e.g. lamp button, door bell and etc.) Do not use fixed or mobile phones. Risk of explosion and toxication!

- Open doors and windows.
- Turn off all valves on gas appliances and gas meter at the main control valve, unless it's in a confined space or cellar.
- Check all tubes and connections for tightness. If you still smell gas leave the property.
- Warn the neighbours.
- Call the fire-brigade. Use a telephone outside the house.
- Call the Gas Emergency Services immediately on 0800 111 999. If you have door or gates that are secured by an electric lock, or entry phone, please open these manually.
- Do not re-enter the property until you are told it is safe to do so.

Electrical safety

- If the product has a failure, it should not be operated unless it is repaired by an Authorized Service Agent. There is the risk of electric shock!
- Only connect the product to a grounded outlet/line with the voltage and protection as specified in the “Technical specifications”. Have the grounding installation made by a qualified electrician while using the product with or without a transformer. Our company shall not be liable for any problems arising due to the product not being earthed in accordance with the local regulations.
- Never wash the product by spreading or pouring water onto it! There is the risk of electric shock!
- Never touch the plug with wet hands! Never unplug by pulling on the cable, always pull out by grabbing the plug.
- The product must be disconnected during installation, maintenance, cleaning and repairing procedures.
- If the power connection cable for the product is damaged, it must be replaced by the manufacturer, its service agent or similarly qualified persons in order to avoid a hazard.
- The appliance must be installed so that it can be completely disconnected from the mains supply. The separation must be provided by a switch built into the fixed electrical installation, according to construction regulations.
- Rear surface of the oven gets hot when it is in use. Make sure that the gas/electrical connection does not contact the rear surface; otherwise, connections can get damaged.
- Do not trap the mains cable between the oven door and frame and do not route it over hot

surfaces. Otherwise, cable insulation may melt and cause fire as a result of short circuit.
- Any work on electrical equipment and systems should only be carried out by authorized and qualified persons.
- In case of any damage, switch off the product and disconnect it from the mains. To do this, turn off the fuse at home.
- Make sure that fuse rating is compatible with the product.

Product safety
- The appliance and its accessible parts become hot during use. Care should be taken to avoid touching heating elements. Children less than 8 years of age shall be kept away unless continuously supervised.
- Never use the product when your judgment or coordination is impaired by the use of alcohol and/or drugs.
- Be careful when using alcoholic drinks in your dishes. Alcohol evaporates at high temperatures and may cause fire since it can ignite when it comes into contact with hot surfaces.
- Do not place any flammable materials close to the product as the sides may become hot during use.
- During use the appliance becomes hot. Care should be taken to avoid touching heating elements inside the oven.
- Keep all ventilation slots clear of obstructions.
- Do not heat closed tins and glass jars in the oven. The pressure that would build-up in the tin/jar may cause it to burst.
- Do not place baking trays, dishes or aluminium foil directly onto the bottom of the oven. The heat accumulation might damage the bottom of the oven.
- Do not place aluminium foil on the base of the tray.
- Do not use harsh abrasive cleaners or sharp metal scrapers to clean the oven door glass since they can scratch the surface, which may result in shattering of the glass.
- Do not use steam cleaners to clean the appliance as this may cause an electric shock.
- Do not use the product if the front door glass removed or cracked.
- Do not use the oven handle to hang towels for drying. Do not hang up towel, gloves, or similar textile products when the grill function is being used with the Grill door open.
- Always use heat resistant oven gloves when putting in or

removing dishes into/from the hot oven.
- Ensure that the appliance is switched off before replacing the lamp to avoid the possibility of electric shock.
- Unattended cooking on a hob with fat or oil can be dangerous and may result in fire. NEVER try to extinguish a fire with water, but switch off the appliance and then cover flame e.g. with a lid or a fire blanket.
- Danger of fire: Do not store items on the cooking surfaces.

Prevention against possible fire risk!
- Ensure all electrical connections are secure and tight to prevent risk of arcing.
- Do not use damaged cables or extension cables.
- Ensure liquid or moisture is not accessible to the electrical connection point.
- To prevent gas leakage ensure that the gas connection is sound.

Intended use
- This product is designed for domestic use. Commercial use will void the guarantee.
- This appliance is for cooking purposes only. It must not be used for other purposes, for example room heating.
- This product should not be used for warming the plates under the grill, drying towels, dish cloths etc. by hanging them on the oven door handles. This product should also not be used for room heating purposes.
- The manufacturer shall not be liable for any damage caused by improper use or handling errors.
- The oven can be used for defrosting, baking, roasting and grilling food.

Safety for children
- Accessible parts may become hot during use. Young children should be kept away.
- The packaging materials will be dangerous for children. Keep the packaging materials away from children. Please dispose of all parts of the packaging according to environmental standards.
- Electrical and/or gas products are dangerous to children. Keep children away from the product when it is operating and do not allow them to play with the product.
- An additional protective means to avoid contact with the oven door is available. This part should be fitted when young children are likely to be present.
- Do not place any items above the appliance that children may reach for.

- When the door is open, do not load any heavy object on it and do not allow children to sit on it. It may overturn or door hinges may get damaged.

Disposing of the old product

Compliance with the WEEE Directive and Disposing of the Waste Product:

This product complies with EU WEEE Directive (2012/19/EU). This product bears a classification symbol for waste electrical and electronic equipment (WEEE).
This product has been manufactured with high quality parts and materials which can be reused and are suitable for recycling. Do not dispose of the waste product with normal domestic and other wastes at the end of its service life. Take it to the collection center for the recycling of electrical and electronic equipment. Please consult your local authorities to learn about these collection centers.

Compliance with RoHS Directive:

The product you have purchased complies with EU RoHS Directive (2011/65/EU). It does not contain harmful and prohibited materials specified in the Directive.

Package information

- Packaging materials of the product are manufactured from recyclable materials in accordance with our National Environment Regulations. Do not dispose of the packaging materials together with the domestic or other wastes. Take them to the packaging material collection points designated by the local authorities.

Future Transportation

- Keep the product's original carton and transport the product in it. Follow the instructions on the carton. If you do not have the original carton, pack the product in bubble wrap or thick cardboard and tape it securely.
- To prevent the wire grill and tray inside the oven from damaging the oven door, place a strip of cardboard onto the inside of the oven door that lines up with the position of the trays. Tape the oven door to the side walls.
- Secure the caps and pan supports with adhesive tape.
- Do not use the door or handle to lift or move the product.

Do not place any objects onto the product and move it in upright position.
Check the general appearance of your product for any damages that might have occurred during transportation.

2 General information

Overview

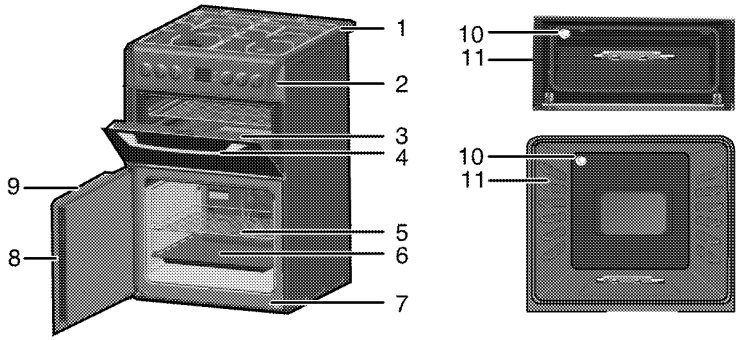

1 Burner plate
2 Control panel
3 Top oven door
4 Handle
5 Wire shelf
6 Tray
7 Rating plate
8 Main oven door
9 Handle
10 Lamp
11 Shelf positions

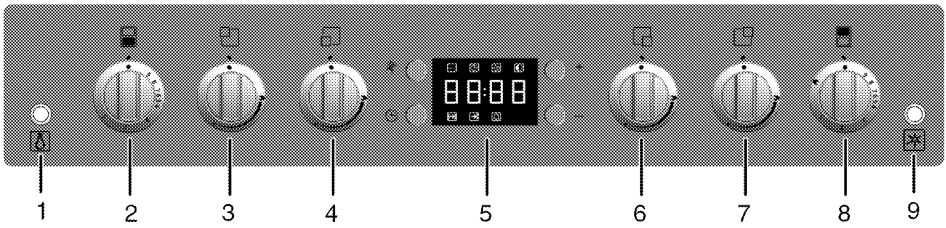

1 Lamp button
2 Main oven thermostat knob
3 Normal burner Rear left
4 Rapid burner Front left
5 Digital timer
6 Auxiliary burner Front right
7 Normal burner Rear right
8 Top oven thermostat knob
9 Ignition button

Package contents

Accessories supplied can vary depending on the product model. Not every accessory described in the user manual may exist on your product.

1. User manual
2. Small oven tray
   Used for small portions. This oven tray is placed onto the wire shelf.

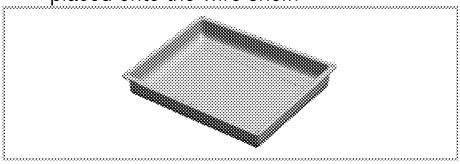

3. Wire Shelf
   Used for roasting and for placing the food to be baked, roasted or cooked in casserole dishes to the desired rack.

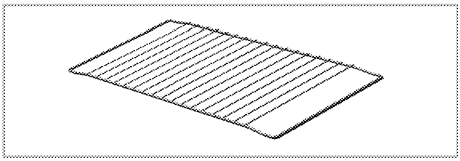

4. Small wire shelf
   It is placed into the tray (if supplied) in order to collect the dripping fat while grilling so that the oven is kept clean.

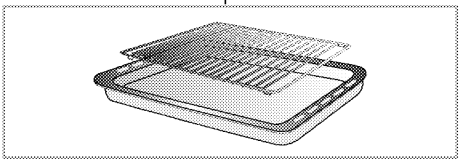

5. Griddle

Griddle becomes very hot while it is in use. Keep children away from the oven.

Used to cook your food directly. Place the griddle onto the burners and do not put any vessels on it.

- Metal utensils such as spatulas can damage the cooking surface.
- Do not place the griddle horizontally onto the hob. It will not fit properly and may fall from the top of the hob.
- Heat the griddle for max. 2 minutes before putting food on it. It may get damaged if it is heated for longer.

Griddle cooking table

Dish	Knob position
Crepe	High-medium-low
Bacon	High-medium-low
Chops	High-medium-low
Steak	High-medium-low
Hamburger	High-medium-low
Sliced potatoes	Medium-low
Egg	Medium-low
Fish cakes	Medium-low

6. Metal shield

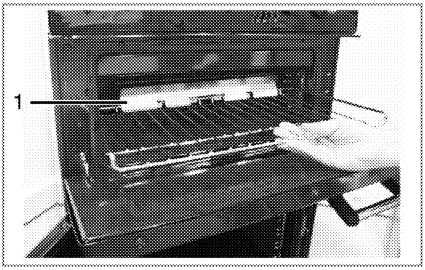

1 Metal shield

Metal shield should be attached on the rear upper side of wire shelf. Use the wire shelf as its bended side positioned on the front of the cavity and turned downside.

Technical specifications

GENERAL	
External dimensions (height / width / depth)	900 mm/600 mm/600 mm
Voltage / frequency	230 V ~ 50 Hz
Total power consumption	50 W
Fuse	min.13 A
Cable type / section	H05VV-FG 3 x 0,75 mm^2 or equivalent
Cable length	max. 2 m
Category of gas product	II_{2H3+}
Gas type / pressure	NG G 20/20 mbar
Total gas consumption	12.7 kW
Converting the gas type / pressure[§]	LPG G 30/28-30 mbar
– optional	Propane 31/37 mbar
HOB	
Burners	
Rear left	**Normal burner**
Power	2 kW
Front left	**Rapid burner**
Power	2.9 kW
Front right	**Auxiliary burner**
Power	1 kW
Rear right	**Normal burner**
Power	2 kW
OVEN/GRILL	
Top oven	**Gas oven / Grill**
Inner lamp	15–25 W
Grill power consumption	2.3 kW
Gas consumption of oven	2.1 kW
Main oven	**Gas oven**
Inner lamp	15–25 W
Gas consumption of oven	2.5 kW

Technical specifications may be changed without prior notice to improve the quality of the product.

Figures in this manual are schematic and may not exactly match your product.

Values stated on the product labels or in the documentation accompanying it are obtained in laboratory conditions in accordance with relevant standards. Depending on operational and environmental conditions of the product, these values may vary.

Injector table

Position hob zone Gas type / Gas pressure	2000 W Rear left	2900 W Front left	1000 W Front right	2000 W Rear right
G 20/20 mbar	103	115	72	103
G 30/28-30 mbar/ G 31/ 37 mbar	72	87	50	72

Gas type / Gas pressure-Top OVEN	Gas oven	Grill
G 20/20 mbar	105	110
G 30/28-30 mbar/ G 31/ 37 mbar	71	75

Gas type / Gas pressure-Main OVEN	Gas oven
G 20/20 mbar	115
G 30/28-30 mbar / G 31/ 37 mbar	78

call CUSTOMER SERVICES HELPLINE. 0845 600 4911

3 Installation

Product must be installed by a qualified person in accordance with the regulations in force. The manufacturer shall not be held responsible for damages arising from procedures carried out by unauthorized persons which may also void the warranty.

Preparation of location and electrical installation for the product is under the installer's responsibility.

DANGER:
The product must be installed in accordance with all local gas and/or electrical regulations.

DANGER:
Prior to installation, visually check if the product has any defects on it. If so, do not have it installed.
Damaged products cause risks for your safety.

Before installation

To ensure that critical air gaps are maintained under the appliance, we recommend that this appliance is mounted on a solid base and that the feet do not sink into any carpet or soft flooring.
The kitchen floor must be able to carry the weight of the appliance plus the additional weight of cookware and bakeware and food.

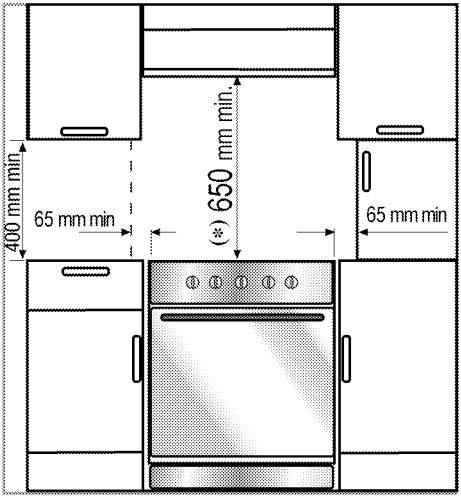

- It can be used with cabinets on either side but in order to have a minimum distance of 400mm above hotplate level allow a side clearance of 65mm between the appliance and any wall, partition or tall cupboard.
- It can also be used in a free standing position. Allow a minimum distance of 650 mm above the hob surface.
- (*) If a cooker hood is to be installed above the cooker, refer to cooker hood manufacturer' instructions regarding installation height (min 650 mm).
- Movement of your appliance is most easily achieved by lifting the front as follows and pulling towards. Open the top oven door and the bottom oven door sufficiently to allow a comfortable grip on the underside front edge of the oven roofs. While gripping, it should be avoided to damage any grill elements or oven interior furniture.
- The appliance corresponds to device class 1, i.e. it may be placed with the rear and one side to kitchen walls, kitchen furniture or equipment of any size. The kitchen furniture or equipment on the other side may only be of the same size or smaller.
- Any kitchen furniture next to the appliance must be heat-resistant (100 °C min.).

The appliance must be secured against overbalancing by using the supplied two safety chains on your oven. Fasten hook (1) to the kitchen wall (5) and connect safety chain (2) to the hook.

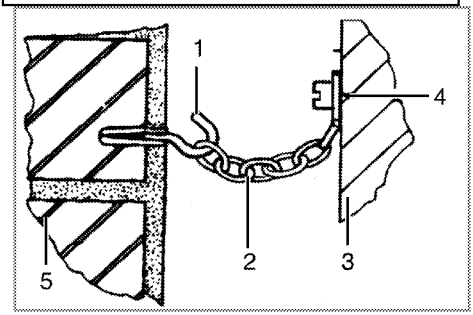

1 Hook (is not supplied)
2 Safety chain (supplied and mounted to oven)

3 Rear of cooker
4 Firmly fix chain to cooker rear
5 Kitchen wall

Room ventilation

All rooms require an openable window, or equvalent, and some rooms will require a permanent vent as well.

The air for combustion is taken from the room air and the exhaust gases are emitted directly into the room.

Good room ventilation is essential for safe operation of your appliance. If there is no window or door available for room ventilation, an extra ventilation must be installed.

The appliance may be located in a kitchen, kitchen/diner or a bed-sitting room, but not in a room containing a bath or shower. The appliance must not be installed in a bed-sitting room of less than 20m^3.

Do not install this appliance in a room below ground level unless it is open to ground level on at least one side.

Room size	Ventilation opening
smaller than 5 m^3	min. 100 cm^2
5 m^3 to 10 m^3	min. 50 cm^2
greater than 10 m^3	not required
In the cellar or basement	min. 65 cm^2

Installation and connection

CAUTION

- This appliance is designed for cooking food (baking, roasting, grilling of food and defrosting) and is intended for indoor domestic household and static home use only.
- This appliance should not be used for any other purpose or in any other application, such as for non-domestic use or in a commercial environment.
- In addition this appliance is not suitable for use on any type of boat (offshore, inland waterway, canal boat or houseboat), caravans or motor homes.
- Incorrect installation environments will void the guarantee.
- This appliance should not be used for warming plates under the grill, drying towels, dish cloths etc. by hanging them on the oven door handles or for room heating purposes.
- The manufacturer shall not be liable for any damage caused by improper use or handling.

Product can only be installed and connected in accordance with the statutory installation rules.

Do not install the product next to refrigerators or freezers. The heat emitted by the product will increase the energy consumption of cooling appliances.

- Carry the product with at least two persons.
- Product must be placed directly on the floor. It must not be placed onto a base or a pedestal.

Do not use the door and/or handle to carry or move the product. The door, handle or hinges get damaged.

Electrical connection

Connect the product to a grounded outlet/line protected by a fuse of suitable capacity as stated in the "Technical specifications" table. Have the grounding installation made by a qualified electrician while using the product with or without a transformer. Our company shall not be liable for any damages that will arise due to using the product without a grounding installation in accordance with the local regulations.

DANGER:
The product must be connected to the mains supply only by an authorised and qualified person. The product's warranty period starts only after correct installation. Manufacturer shall not be held responsible for damages arising from procedures carried out by unauthorised persons.

DANGER:
The power cable must not be clamped, bent or trapped or come into contact with hot parts of the product.
A damaged power cable must be replaced by a qualified electrician. Otherwise, there is risk of electric shock, short circuit or fire!

The mains supply data must correspond to the data specified on the type label of the product. The rating plate is either seen when the door or

the lower cover is opened or it is located at the rear wall of the unit depending on the unit type. Power cable of your product must comply with the values in "Technical specifications" table.

Power cable plug must be within easy reach after installation (do not route it above the hob).

The moulded plug on this appliance incorporates a 13 A fuse. Should the fuse need to be replaced an ASTA approved BS1362 fuse of the same rating must be used. Do not forget to refit the fuse cover. In the event of losing the fuse cover, the plug must not be used until a replacement fuse cover has been fitted. Colour of the replacement fuse cover must be the same colour as that visible on the pin face of the plug. Fuse covers are available from any good electrical store.

- Fitting a different plug
  As the colours of the wires in the mains lead of this appliance may not correspond with the coloured markings identifying the terminals on your plug, proceed as follows:
- Brown cable = L (Live)
- Blue cable = N (Neutral)
- Green/yellow cable must be connected to ground (E) ⏚ line.
  With the alternative plugs a 13 A fuse must be fitted either in the plug or adaptor or in the main fuse box. If in doubt contact a qualified electrician.

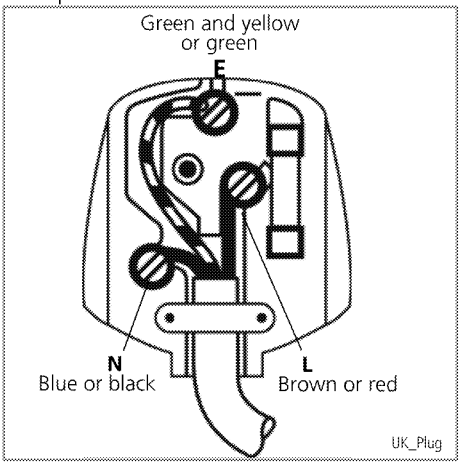

DANGER:
Before starting any work on the electrical installation, disconnect the product from the mains supply.
There is the risk of electric shock!

Plug the power cable into the socket.

Gas connection

DANGER:
Product can be connected to gas supply system only by an authorised and qualified person or technician with licence.
Risk of explosion or toxication due to unprofessional repairs!
Manufacturer shall not be held responsible for damages arising from procedures carried out by unauthorised or unlicensed persons.

DANGER:
Before starting any work on the gas installation, disconnect the gas supply.
There is the risk of explosion!

- Gas adjustment conditions and values are stated on labels (or ion type label).
- In the UK, Gas Safe registered installers (Including the Regions of British Gas) undertake to work to safe and satisfactory standards.

Regulations

The cooker must be installed in accordance with the Gas Safety (Installation and Use) Regulations and the relevant Building Regulations in force.

Your product is equipped for natural gas (NG).

The cooker is designed for UK installation using a flexible connection with tubing in accordance with the regulations in force.
Length of 900mm is recommend.
Make sure that the natural gas valve is readily accessible.
Service Representative will remove the plug during connection and connect your appliance by means of a straight connection device (coupling).

If a flexible hose is used it must not come into contact with the top 150mm/6 inches (hot region) of the rear of the appliance. Do not pass the hose through the (**) hot region behind the oven.

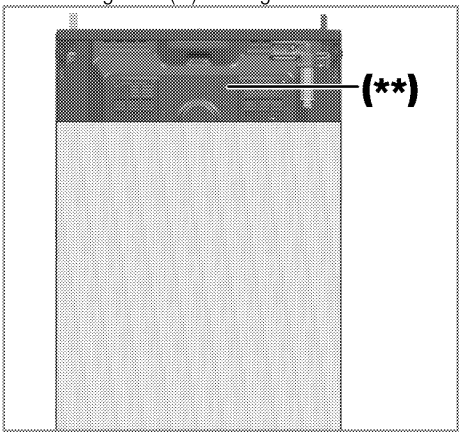

(**) Hot region

If you need to use your appliance later with a different type of gas, you must consult an authorised service centre for the related conversion procedure.

Seal all connections with gas sealant.

1. Shut gas supply.
2. Connect safety (gas) hose *5* to the inlet valve of the oven.
3. Connect gas hose with elbow joint *6* .

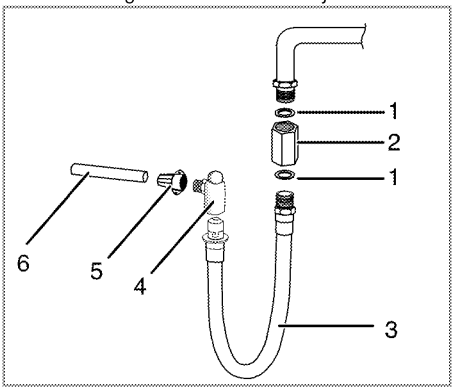

1 Gasket
2 Adapter (optional) with 1/2" outlet
3 Gas (safety) hose
4 Valve with 90° outlet
5 Connection piece
6 Gas supply pipe

DANGER:
The gas hose must not be clamped, bent or trapped or come into contact with hot parts of the product.
There is the risk of explosion due to damaged gas hose.

- Push the product towards the kitchen wall.
- Hook safety chain.
- Adjusting the feet of oven
  Vibrations during use may cause cooking vessels to move. This dangerous situation can be avoided if the product is level and balanced.
  For your own safety please ensure the product is level by adjusting the four feet at the bottom by turning left or right and align level with the work top.

Final check

1. Check electrical functions.
2. Open gas supply.
3. Check gas installations for secure fitting and tightness.
4. Ignite burners and check appearance of the flame.

Flame must be blue and have a regular shape. If the flame is yellowish, check if the burner cap is seated securely or clean the burner.

Gas conversion

DANGER:
Before starting any work on the gas installation, disconnect the gas supply.
There is the risk of explosion!

In order to change your appliance's gas type, change all injectors and make flame adjustment for all valves at reduced flow rate position.

- Gas conversion must only be carried out by a Gas Safe registered installer or service agent.

Exchange of injector for the burners

1. Take off burner cap and burner body.

2. Unscrew injectors by turning the counter-clockwise.
3. Fit new injectors.
4. Check all connections for secure fitting and tightness.

New injectors have their position marked on their packing or injector table on *Injector table, page 13* can be referred to.

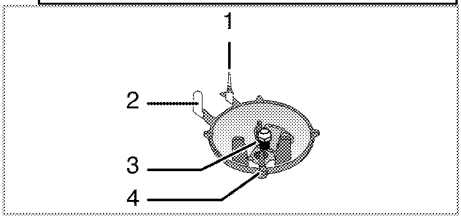

1 Flame failure device
2 Spark plug
3 Injector
4 Burner

Unless there is an abnormal condition, do not attempt to remove the gas burner taps. You must call an Authorised service agent if it is necessary to change the taps.

Reduced gas flow rate setting for hob taps

1. Ignite the burner that is to be adjusted and turn the knob to the reduced position.
2. Remove the knob from the gas tap.
3. Use an appropriately sized screwdriver to adjust the flow rate adjustment screw.

For LPG (Butane - Propane) turn the screw clockwise. For the natural gas, you should turn the screw **counter-clockwise**once.

» The normal length of a straight flame in the reduced position should be 6-7 mm.

4. If the flame is higher than the desired position, turn the screw clockwise. If it is smaller turn anticlockwise.
5. For the last control, bring the burner both to high-flame and reduced positions and check whether the flame is on or off.

Depending on the type of gas tap used in your appliance the adjustment screw position may vary.

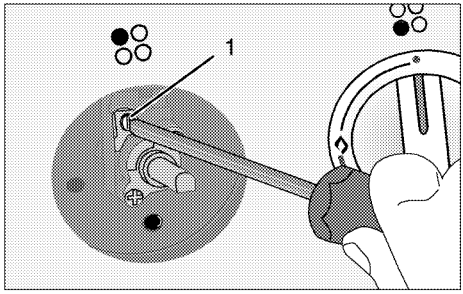

1 Flow rate adjustment screw

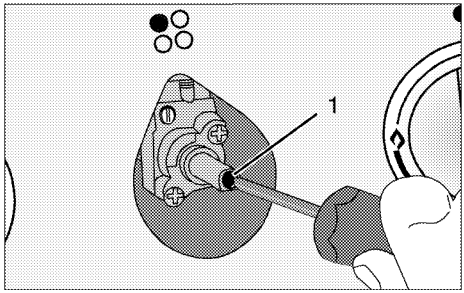

1 Flow rate adjustment screw

Exchange of injector for grill burner

1. Unscrew the screws fixing the rear cover sheet .

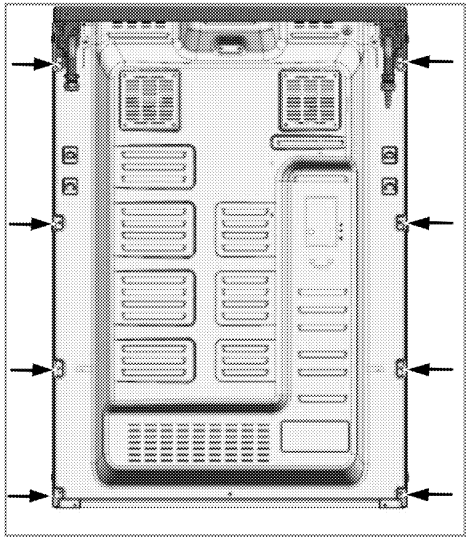

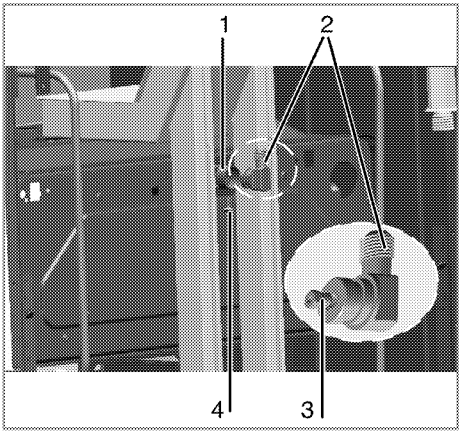

1 Grill burner
2 Injector holder
3 Injector
4 Fixing screw

2. After removing the rear cover sheet, you can reach the grill burner tube (1) and grill injector holder (2).
3. Unscrew the grill injector holder (2) fixing screw (4).
4. Unscrew the injector (3) and replace it with appropriate injector, see injector table, on *Injector table, page 13*.
5. Conduct the leakage control after replacing the injector.
6. Assemble the injector holder (2) into the grill burner tube (1).
7. Fix the injector holder by the screw (4).
8. Assemble the rear cover sheet.

Exchange of injector for oven burner

It is recommended to remove the top oven door (see, *Removing the oven door, page 33*) disassemble oven door, to provide an ergonomic disassemble of the oven burner.

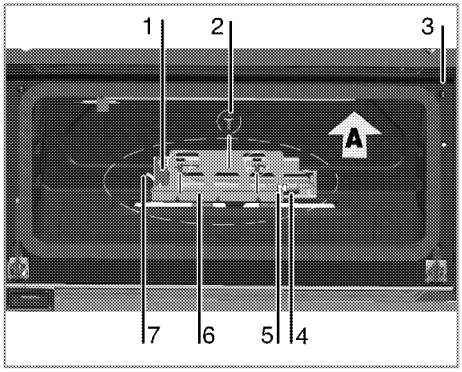

1 Oven burner
2 Screw (3 pieces)
3 Cut-off valve
4 Injector holder
5 Injector
6 Oven burner holder
7 Clips

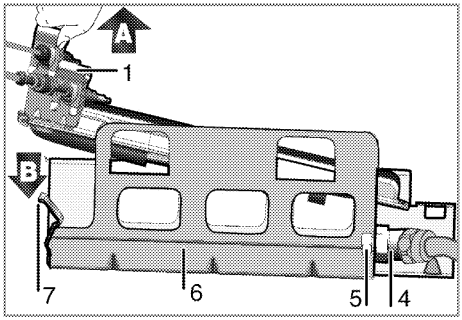

1. Unscrew 3 screws (2) to remove oven burner (1) and oven burner holder (7).
2. Gently pull up burner and holder in “A” direction- be careful with gas connection tube and thermocouple.
3. Push the clips (7) in “B” direction to disassemble oven burner (1) and its holder(6).
4. Unscrew the injector (5) and replace it with appropriate injector, see, *Injector table, page 13* injector table.
5. Conduct the leakage control after replacing the injector.
6. Assemble the oven burner (1) to its holder (6) by pushing the burner on the clips (7) in “B” direction.

7. Mount the oven burner (1) and holder (6) as a group to the cavity by screwing 3 screws (2).

Exchange of By-pass screw for Flame Controlling Valve

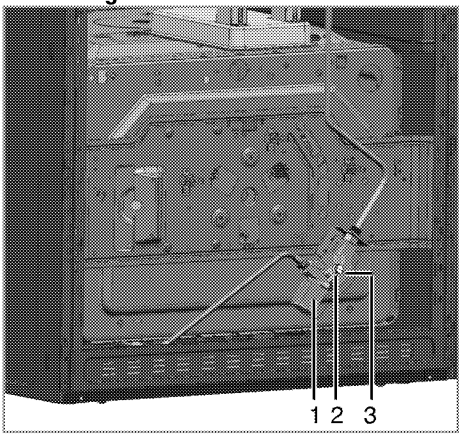

1 Flame controlling valve
2 Klinger seal (leakage)
3 By-pass screw

Replace By-pass screw and leakage seal on the Flame Controlling Valve.
By-pass screw have the words below:

- "N" NG
- "L" LPG

Reduced flow adjustment for the gas oven

For the appropriate functioning of the oven re-checking the by-pass adjustment is extremely important. In order to provide maximum security to the user these operations have to be done with care.

1. Ignite the burner that is to be adjusted and turn the knob to the high flame position.
2. Close the oven door and wait for 10 to 15 minutes until the oven becomes ready for adjustment.
3. Take out the knob
4. After 15 minutes, adjust the oven to the lowest flame position.

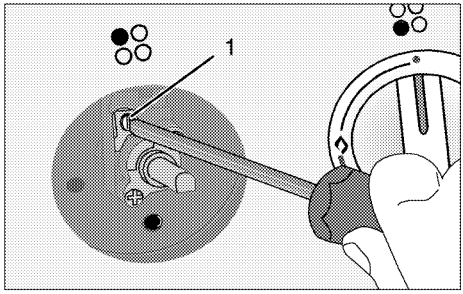

5. Set the flame length to 2 to 3 mm by means of the screw *1* on the oven tap. Turning in clockwise direction reduces the flame, turning counter-clockwise increases the flame.

Reduced flow adjustment for the gas oven

Reduced flow rate adjustment is extremely important for the appropriate functioning of the oven. In order to provide maximum security to the user these operations have to be done with care.

1. Ignite the burner that is to be adjusted and turn the knob to the high flame position.
2. Close the oven door and wait for 10 to 15 minutes until the oven becomes ready for adjustment.
3. After 15 minutes, adjust the oven to the lowest flame position.
4. Take out the knob.
5. Set the flame length to 2 to 3 mm by means of the screw 2 on the oven tap. Turning in clockwise direction reduces the flame, turning counter-clockwise increases the flame.

If the temperature of the oven increases unintendedly, turn off the oven and call the authorised service agent to have oven thermostat repaired.

If the gas type of the unit is changed, then the rating plate that shows the gas type of the unit must also be changed.

4 Preparation

Tips for saving energy

The following information will help you to use your appliance in an ecological way, and to save energy:

- Use dark coloured or enamel coated cookware in the oven since the heat transmission will be better.
- While cooking your dishes, perform a preheating operation if it is advised in the user manual or cooking instructions.
- Do not open the door of the oven frequently during cooking.
- Try to cook more than one dish in the oven at the same time whenever possible. You can cook by placing two cooking vessels onto the wire shelf.
- Cook more than one dish one after another. The oven will already be hot.
- Defrost frozen dishes before cooking them.
- Use pots/pans with cover for cooking. If there is no cover, energy consumption may increase 4 times.
- Select the burner which is suitable for the bottom size of the pot to be used. Always select the correct pot size for your dishes. Larger pots require more energy.

Initial use

Time setting

Before you can use the oven, the time must be set. If the time is not set, oven will not operate.

While making any adjustment, related symbols on the clock will flash.

Press „–“ or „+“ (5/6) keys to set the time after the oven in energized for the first time.

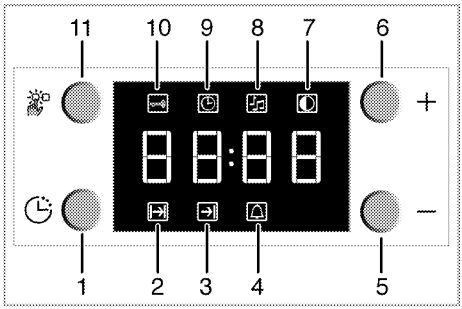

1 Program key
2 Cooking time
3 End of cooking time
4 Alarm symbol
5 Minus key
6 Plus key
7 Screen brightness setting
8 Alarm volume
9 Current time
10 Keylock
11 Adjustment key

After setting the time, you can start and end the cooking by selecting the desired position with temperature button and function button.

If the current time is not set, time setting will start increasing/moving up from **12:00**. Clock symbol *'9'* will be displayed to indicate that the current time has not been set. This symbol will disappear once the time is set.

Current time settings are cancelled in case of power failure. It needs to be readjusted.

To change the time of the day you have previously set:

1. Press (11) key to activate current time symbol *'9'*.
2. Press „–“ or „+“ (5/6) keys to set the current time.

Changing screen brightness adjustment

1. Press (11) key to activate screen brightness symbol *'7'* for screen brightness adjustment.
2. Press **'–'** or **'+'** (5/6) keys to set the desired brightness.

» Selected brightness level will appear as **d-01**, **d-02** or **d-03** on the display.

First cleaning of the appliance

The surface might get damaged by some detergents or cleaning materials.
Do not use aggressive detergents, cleaning powders/creams or any sharp objects during cleaning.
Do not use harsh abrasive cleaners or sharp metal scrapers to clean the oven door glass since they can scratch the surface, which may result in shattering of the glass.

1. Remove all packaging materials.
2. Wipe the surfaces of the appliance with a damp cloth or sponge and dry with a cloth.

Initial heating

Heat up the product for about 30 minutes and then switch it off. Thus, any production residues or layers will be burnt off and removed.

WARNING
Hot surfaces cause burns!
Product may be hot when it is in use. Never touch the hot burners, inner sections of the oven, heaters and etc. Keep children away. Always use heat resistant oven gloves when putting in or removing dishes into/from the hot oven.

Gas oven

1. Take all baking trays and the wire grill out of the oven.
2. Close the oven door.
3. Select the highest flame of the gas oven; see *How to use the gas oven, page 25*.
4. Operate the oven about 30 minutes.
5. Turn off your oven; See *How to use the gas oven, page 25*

Smoke and smell may emit for a couple of hours during the initial operation. This is quite normal. Ensure that the room is well ventilated to remove the smoke and smell. Avoid directly inhaling the smoke and the smell that emits.

5 How to use the hob

General information about cooking

Never fill the pan with oil more than one third of it. Do not leave the hob unattended when heating oil. Overheated oils bring risk of fire. **Never attempt to extinguish a possible fire with water!** When oil catches fire, cover it with a fire blanket or damp cloth. Turn off the hob if it is safe to do so and call the fire department.

- Before frying foods, always dry them well and gently place into the hot oil. Ensure complete thawing of frozen foods before frying.
- Do not cover the vessel you use when heating oil.
- Place the pans and saucepans in a manner so that their handles are not over the hob to prevent heating of the handles. Do not place unbalanced and easily tilting vessels on the hob.
- Do not place empty vessels and saucepans on cooking zones that are switched on. They might get damaged.
- Operating a cooking zone without a vessel or saucepan on it will cause damage to the product. Turn off the cooking zones after the cooking is complete.
- As the surface of the product can be hot, do not put plastic and aluminum vessels on it. Such vessels should not be used to keep foods either.
- Use flat bottomed saucepans or vessels only.
- Put appropriate amount of food in saucepans and pans. Thus, you will not have to make any unnecessary cleaning by preventing the dishes from overflowing. Do not put covers of saucepans or pans on cooking zones.
  Place the saucepans in a manner so that they are centered on the cooking zone. When you want to move the saucepan onto another cooking zone, lift and place it onto the cooking zone you want instead of sliding it.

Gas cooking

- Size of the vessel and the flame must match each other. Adjust the gas flames so that they will not extend the bottom of the vessel and center the vessel on saucepan carrier.

Using the hobs

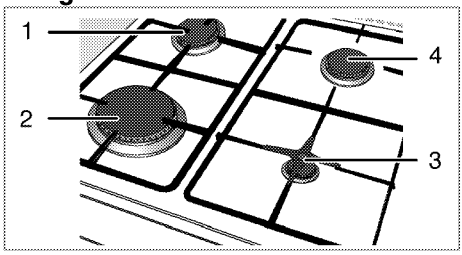

List of advised diameter of pots to be used on related burners

1 Normal burner 18-20 cm
2 Rapid burner 22-24 cm
3 Auxiliary burner 12-18 cm
4 Normal burner 18-20 cm

Large flame symbol indicates the highest cooking power and small flame symbol indicates the lowest cooking power. In turned off position (top), gas is not supplied to the burners.

Igniting the gas burners

Gas burners are ignited with ignition buttons.

1. Keep burner knob pressed.
2. Turn it counter clockwise to large flame symbol.
3. Press and release the ignition button. Repeat the procedure until the released gas is ignited.
4. Adjust it to the desired cooking power.

Turning off the gas burners

Turn the knob to off (upper) position.

Gas shut off safety system (in models with thermic component)

1. Gas shut off safety

As a counter measure against blow out due to fluid overflows at burners, safety mechanism trips and shuts off the gas.

- Push the knob inwards and turn it counter clockwise to ignite.
- After the gas ignites, keep the knob pressed for 3-5 seconds more to engage the safety system.
- If the gas does not ignite after you press and release the knob, repeat the same procedure by keeping the knob pressed for 15 seconds.

DANGER:
Release the button if the burner is not ignited within 15 seconds.
Wait at least 1 minute before trying again. There is the risk of gas accumulation and explosion!

Griddle

Ensure the griddle placed to pins on burner plate. Griddle becomes very hot while it is in use. Keep children away from the oven.
Used to cook your food directly. Place the griddle only onto multi-segment cooking zone.

- Metal utensils such as spatulas can damage the cooking surface.
- Do not place the griddle horizontally onto the hob. It will not fit properly and may fall from the top of the hob.
- Heat the griddle for max. 2 minutes before putting food on it. It may get damaged if it is heated for longer.

Cause of made of cast iron, the griddle is heavy. Be careful during handling.

6 How to operate the oven

General information on baking, roasting and grilling

WARNING
Hot surfaces cause burns!
Product may be hot when it is in use. Never touch the hot burners, inner sections of the oven, heaters and etc. Keep children away. Always use heat resistant oven gloves when putting in or removing dishes into/from the hot oven.

DANGER:
Be careful when opening the oven door as steam may escape.
Exiting steam can scald your hands, face and/or eyes.

Tips for baking

Select the correct shelf position before turning the oven on – don't move oven shelves when hot.

- Always preheat the oven first for 10 minutes to ensure the food is at the correct temperature as soon as it goes into the oven.
- Use good quality baking tins such as non stick or aluminium. Line tins with greaseproof or baking paper to prevent sticking, if necessary.
- Do not fill cake tin more than half full.
- If baking one tray of food or cake, place centrally on the shelf level and centrally in the oven.
- If cooking on more than one level, swop food between the shelves at least halfway through cooking.
- Try not to open the oven door too much during cooking.
- To check if a cake is cooked, insert a skewer or cocktail stick into the centre. If it comes out clean, the cake is done, if it has food stuck to it, continue to cook the cake for a few minutes more and repeat the process.

Tips for roasting

Preheat oven first.

- If possible take meat or poultry out of refrigerator 30 minutes before cooking.
- Weigh meat first and calculate how long it will take to cook.
- Before cooking meat or poultry, lightly coat with butter or oil and season with salt, pepper, herbs, or other seasoning. Place in a roasting dish and use a rack to lift the meat out of its juices. Place dish in centre of oven.
- Turn meat over halfway through cooking.
- If the roasted meat is covered with foil, (it helps to keep the oven clean), always uncover for the last half an hour of cooking to allow browning.
- Remove meat from oven once cooked and stand covered in foil for 10-15 minutes to allow the meat to relax and juices to be reabsorbed which ensures the roast is tender and moist.

How to use the gas oven

Before you can use the oven, the time must be set. If the time is not set, oven can not be ignited with electricity.

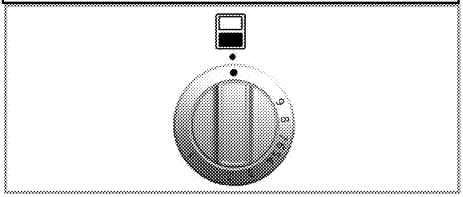

The gas oven is operated by the gas oven control knob. In off position (top) the gas supply is Off.

Switch on the gas oven

The gas oven is ignited with the ignition button.

1. Open oven door.
2. Keep gas oven control knob pressed and turn it counterclockwise.
3. Press ignition button and release it again.
4. Keep the gas oven control knob pressed for 3 to 5 seconds.

» Repeat the process until the emanating gas is ignited.

5. Keep the gas oven control knob pressed for another 3 to 5 seconds. Be sure that gas has ignited and flame is present.
6. Select the desired baking power/ gas mark.
7. If there is no electricity; ignite the gas with the gas lighter from the ignition control hole.

DANGER:
There is the risk of gas compression and explosion!
Do not attempt to ignite the gas more that 15 seconds. If the burner is not ignited within 15 seconds, turn off the knob and wait for 1 minute. Ventilate the room before reattempting to ignite the burner. There is the risk of gas compression and explosion!

Switch off the gas oven

1. Turn gas oven control knob to off position (top).

Gas level temperature conversion chart

Gas level	1	2	3	4	5	6	7	8	9
Temperature °C	140	145	150	175	190	200	220	240	250
Temperature °F	284	293	302	347	374	392	428	464	482

Cooking times table

1st rack of the oven is the **bottom** rack.

Maximum load capacity of oven tray: 4 kg (8.8 lb).

The timings in this chart are meant as a guide. Timings may vary due to temperature of food, thickness, type and your own preference of cooking.

Stand dishes on a baking sheet to prevent spillages onto oven base and help keep oven clean.

Baking and roasting

Food	Preheating *	Insertion level	Control knob position	Cooking time
Roast beef: Sirloin, topside, toprump, rib	10 min.	3	7 then 4	20...30 mins, then Rare 15mins per 450 g/lb + 15 mins Medium 20 mins, per 450 g/lb + 20 mins. Well done 25 mins per 450 g/lb + 25 mins
Roast Lamb; Leg, shoulder, rack, breast, whole neck fillet	10 min.	3	7 then 4	20...30 mins, then 20...25 mins, per 450 g/lb + 20 mins
Roast pork; loin, shoulder, leg	10 min.	3	7 then 4	20...30 mins, then 25...30 mins, per 450 g/lb + 25 mins
Roast chicken	10 min.	3	7 then 4	20 mins then,20...25 mins, per 450 g + 20 mins
Roast turkey	10 min.	2	9 then 4...5	20...30 mins then,25...30 mins, per 450 g + 25 mins
Casseroles	–	4	3	2...3 hours
Whole fish	10 min.	3	4	20...30 mins §
Pasta bake	10 min.	4	5	25...30 mins §
Fruit pies	10 min.	4	4	25...30 mins §
Pizza	10 min.	4 or 5	4...5	12...25 mins, depending on thickness §
Small cakes - One tray	10 min.	4	4	20...30 mins
Small cakes - Two trays	10 min.	4 and 2	4	20...30 mins
Victoria sandwich	10 min.	4	4	20...30 mins
Biscuits	10 min.	4	4	15...20 mins
Scones	10 min.	4	4	15...20 mins
Rich fruit cake (20-22cm)	10 min.	3	3	3...4 hours

*** at control knob position 7 / § depending on quantity / $^{\#}$ depending on size**

How to operate the oven timer

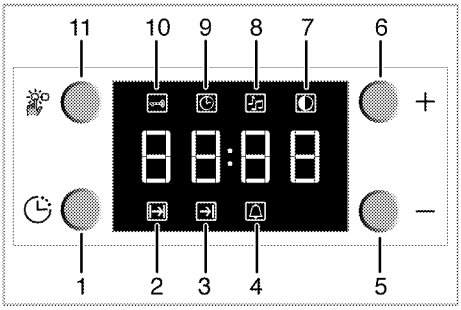

1 Program knob
2 Cooking time
3 Cooking end time
4 Alarm period
5 Minus key
6 Plus key
7 Screen brightness adjustment
8 Alarm volume
9 Current time
10 Keylock
11 Adjustment key

The maximum time to be set for the end of the cooking process is 23 hours and 59 minutes. In case of power cut, program will be canceled. Reprogram is needed.

While making any adjustment, related symbols on the clock will flash. You must wait for a short time for the settings to take effect.

If semi-automatic or full automatic operation mode is set on the clock, time of the day cannot be adjusted.

Cooking time will be displayed once the cooking starts.

Switch on fully automatic operation

In this operation mode you may adjust how long the oven will automatically operate (cooking time) and the time it will be automatically turned off (end of cooking time).

1. Press *1* key to activate cooking time symbol (*2*).
2. Adjust the cooking time using *5* and *6* keys.

» Cooking symbol will be on (will be displayed continuously) after cooking time is set.

3. For the cooking end time, press *1* key to activate cooking end time symbol *'3'*.
4. Adjust cooking end time using *5* and *6* keys.

» Once the cooking end time is set, cooking end symbol and cooking symbol will be lit (displayed continuously). The end of cooking time symbol (3) will disappear as soon as the cooking has started.

5. Place your dish in the oven.
6. Select operation mode and temperature.

» Oven timer automatically calculates the startup time for cooking by using the end of cooking time you have set and the cooking period. Selected operation mode is activated when the startup time of cooking has come and the oven is heated up to the set temperature. It maintains this temperature until the end of the cooking time.

7. After the cooking process is completed, *"End"* symbol will be displayed and the alarm signal will sound.
8. Alarm signal will be on for 2 minutes. To stop the alarm signal, just press any key.

If you mute the alarm by pressing any key, the oven will restart operating. If you press any button at the end of the alarm period, the oven will restart operating.

» Alarm will be silenced and current time will be displayed.

9. Do not forget to turn off the oven using temperature knob and function knob.

Switch on semi-automatic operation

In this operation mode, you may adjust the time period during which the oven will operate (cooking time).

1. Press *1* key to activate cooking time symbol *'2'*.
2. Adjust the cooking time using *5* and *6* keys.

» Cooking symbol shall be on (will be displayed continuously) after cooking time is set.

3. Place your dish in the oven.
4. Select operation mode and temperature.

» The oven will be heated up to the preset temperature and will maintain this temperature until the end of the cooking time you selected.

5. After the cooking process is completed, **"End"** symbol will be displayed and the alarm signal will sound.
6. Alarm signal will be on for 2 minutes. To stop the alarm signal, just press any key.

> If you mute the alarm by pressing any key, the oven will restart operating. If you press any button at the end of the alarm period, the oven will restart operating.

» Alarm will be silenced and current time will be displayed.

7. Do not forget to turn off the oven using temperature knob and function knob.

How to use the program lock

Activate the program lock

You can prevent using of clock buttons by activating the program feature.

> When the keylock function is activated, clock buttons except for *"11"* key cannot be used.

1. Press *'11'* key to activate keylock symbol *"10"*.

» "OFF" will be displayed.

2. Press *6* key to activate the keylock.

» After the keylock has been adjusted, "ON" will be displayed and the keylock symbol will stay on.

Deactivate the program lock

1. Press *'11'* key to activate keylock symbol *"10"*.

» "ON" will be displayed.

2. Press *'5'* key to deactivate the keylock.

» "OFF" will be displayed after the keylock is turned off.

How to use the alarm clock

In addition to using the timer for cooking, it can be also used as a reminder or an alarm clock. As soon as the defined period of time has expired, the alarm clock will emit a signal. The alarm clock has no influence on the functions of the oven.

Setting the alarm clock

1. Press *1* key to activate alarm time symbol (*4*).

> The maximum alarm time can be 23 hours and 59 minutes.

2. Adjust the alarm time using *5* and *6* keys.

» Alarm symbol will be on (will be displayed continuously) after alarm time is set, and the alarm time will be displayed.

3. After the alarm time is finished, alarm symbol will start flashing and an alarm signal is heard.

Switching off the alarm

1. To stop the alarm signal, just press any key.

» Alarm will be silenced and current time will be displayed.

In order to cancel set alarm time;

1. To reset the alarm time, press *1* key to activate alarm time symbol *(4)*.
2. Press and hold the key *5* until *"0.00"* is displayed.

> Alarm time will be displayed. If the alarm time and cooking time are set concurrently, shortest time will be displayed.

Changing alarm sound adjustment

1. Press *'11'* key to activate alarm sound adjustment symbol *(8)* for alarm volume adjustment.
2. Adjust the desired sound using *'5'* and *'6'* keys.

» Selected alarm sound level will be displayed as "b-01", "b-02" or "b-03" on the screen.

How to operate the top oven with gas

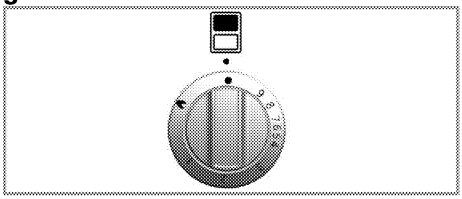

Gas oven is operated with gas oven control knob. In turned off position (top), gas is not supplied.

Turning on the gas oven

Gas oven is ignited with the ignition button.

1. Open the oven door.
2. Keep gas oven control knob pressed and turn it counterclockwise to level *'7'*.

3. Press and release the ignition button.
» Repeat the procedure until the released gas is ignited.
4. Keep the gas oven control knob pressed for about 3 or 5 seconds more until making sure that oven heater is ignited.
5. Select the desired gas power.
6. If electricity is cut-off, ignite the oven heater with a match or lighter from the ignition control hole.

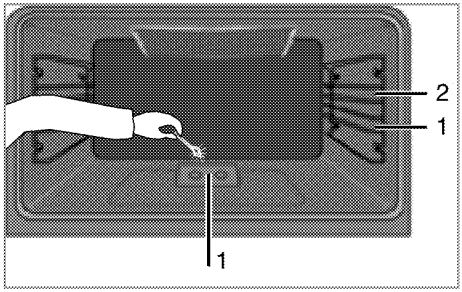

DANGER:
There is the risk of gas compression and explosion!
Do not attempt to ignite the gas more that 15 seconds. If the burner is not ignited within 15 seconds, turn off the knob and wait for 1 minute. Ventilate the room before reattempting to ignite the burner. There is the risk of gas compression and explosion!

Turning off the gas oven

1. Turn the gas oven control knob to Off (upper) position.

Temperature values corresponding to gas positions:

Gas level	1	2	3	4	5	6	7	8	9
Temperature °C	120	130	150	180	190	200	220	230	250
Temperature °F	248	266	302	356	374	392	428	446	482

Cooking times table

1st rack of the oven is the **bottom** rack.

Maximum load capacity of oven tray: 4 kg (8.8 lb).

The timings in this chart are meant as a guide. Timings may vary due to temperature of food, thickness, type and your own preference of cooking.

- Do not place cookware with rough bases on the oven door.
- Ensure that there is at least 25mm space at top of oven when cooking larger foods or using taller cookware.

Baking and roasting for top oven

Food	Preheating *	Insertion level	Gas mark	Cooking time
Fruit pies	10 min.	1	4	25...30 mins
Pizza	10 min.	1-2	4...5	12...25 mins. #
Small cakes	10 min.	1	4	20...25 mins
Victoria sandwich	10 min.	1	4	20...30 mins
Biscuits	10 min.	1	4	15...20 mins
Scones	10 min.	1	4	15...20 mins
Casseroles	10 min.	1	3	2...3 hours
Whole fish	10 min.	1	4	20...30 mins
Pasta bake	10 min.	1	5	25...30 mins

* at control knob position 7 / § depending on quantity / # depending on size

How to operate the gas grill - Top oven

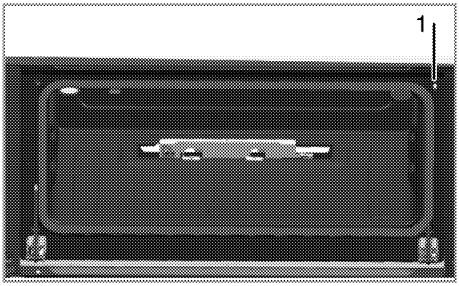

1. Cut-off valve

This product is designed for OPEN DOOR GRILLING. Oven door must remain open while grilling.

WARNING
Hot surfaces may cause burns! Keep children away from the product.
Oven door remains slightly inclined when opened full and thus, possible splashes to not reach you.

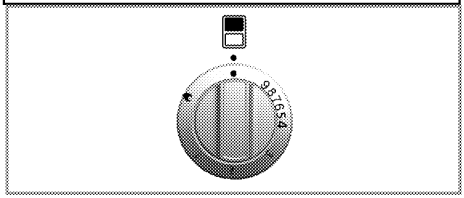

Switching on the grill

Gas grill is ignited with the ignition button.

1. Open the oven door.
2. Keep the knob pressed and turn it **clockwise** to the Grill symbol.
3. Press and release the ignition button.

» Repeat the procedure until the gas is ignited.

4. Keep the knob pressed for 3 to 5 seconds more.
5. Make sure that the grill is ignited.

DANGER:
There is the risk of gas compression and explosion!
Do not attempt to ignite the gas more that 15 seconds. If the burner is not ignited within 15 seconds, turn off the knob and wait for 1 minute. Ventilate the room before reattempting to ignite the burner. There is the risk of gas compression and explosion!

Switching off the grill

1. Turn the Grill control knob to Off (upper) position.

Foods that are not suitable for grilling carry the risk of fire. Only grill food which is suitable for intensive grilling heat.
Do not place the food too far in the back of the grill. This is the hottest area and fatty food may catch fire.

For equipment with a cooling fan

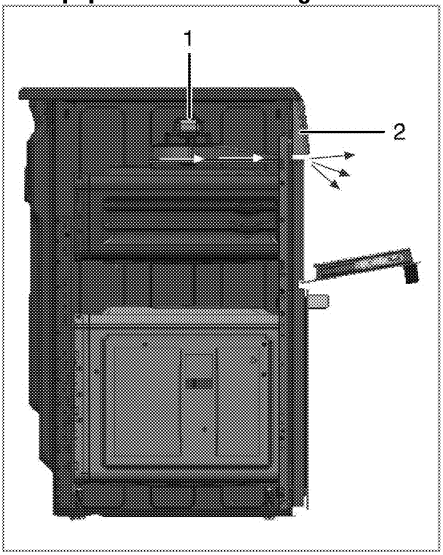

1 Fan
2 Control panel

While open door grilling, in order to protect control panel, knobs and related oven parts; a fan automatically starts working.

Fan continues working until the product cools down.

Cooking times table

1st rack of the oven is the **bottom** rack.

The timings in this chart are meant as a guide. Timings may vary due to temperature of food, thickness, type and your own preference of cooking.

- If food is cooking too quickly, it can be placed in the bottom of the grill pan.
- Do not place cookware with rough bases on the oven door.
- Ensure that there is at least 25mm space at top of oven when grilling larger foods or cookware.
- Do not place aluminium foil on the wire rack to grill on.
- Turn food over to ensure it is cooked on both sides.
- Preheat grill first.

Food	Preparation/setting	Grilling time #
Toast	Place on wire rack in grill pan	3...5 mins
Bacon	Place on wire rack in grill pan	4...6 mins
Gammon steaks	Place on wire rack in grill pan	10...15 mins
Beefburgers	Place on wire rack in grill pan	10...20 mins
Sausages	Place on wire rack in grill pan	10...15 mins
Chops, chicken pieces	Place on upturned wire rack in grill pan	15...30 min.
Fish fillets, fish fingers	Place on wire rack in grill pan	10...20 mins
Grilling /browning tops of foods e.g. cottage pie	Place on base of top oven	8...10 mins

depending on size resp. thickness

7 Maintenance and care

General information

Service life of the product will extend and the possibility of problems will decrease if the product is cleaned at regular intervals.

DANGER:
Disconnect the product from mains supply before starting maintenance and cleaning works.
There is the risk of electric shock!

DANGER:
Allow the product to cool down before you clean it.
Hot surfaces may cause burns!

- Clean the product thoroughly after each use. In this way it will be possible to remove cooking residues more easily, thus avoiding these from burning the next time the appliance is used.
- No special cleaning agents are required for cleaning the product. Use warm water with washing liquid, a soft cloth or sponge to clean the product and wipe it with a dry cloth.
- Always ensure any excess liquid is thoroughly wiped off after cleaning and any spillage is immediately wiped dry.
- Do not use cleaning agents that contain acid or chloride to clean the stainless or inox surfaces and the handle. Use a soft cloth with a liquid detergent (not abrasive) to wipe those parts clean, paying attention to sweep in one direction.
- Do not use solid metal scrapers or abrasive cleaning materials to clean the glass cover. Glass surface can get damaged.

The surface might get damaged by some detergents or cleaning materials.
Do not use aggressive detergents, cleaning powders/creams or any sharp objects during cleaning.
Do not use harsh abrasive cleaners or sharp metal scrapers to clean the oven door glass since they can scratch the surface, which may result in shattering of the glass.

Do not use steam cleaners to clean the appliance as this may cause an electric shock.

Cleaning the hob

Gas hobs

1. Remove and clean the saucepan carriers and burner caps.
2. Clean the hob.
3. Install the burner caps and make sure that they are seated correctly.
4. When installing the upper grills, pay attention to place the saucepan carriers so that the burners are centered.

Cleaning the control panel

Clean the control panel and knobs with a damp cloth and wipe them dry.

Do not remove the control buttons/knobs to clean the control panel.
Control panel may get damaged!

Cleaning the oven

To clean the side wall

1. Remove the front section of the side rack by pulling it in the opposite direction of the side wall.
2. Remove the side rack completely by pulling it towards you.

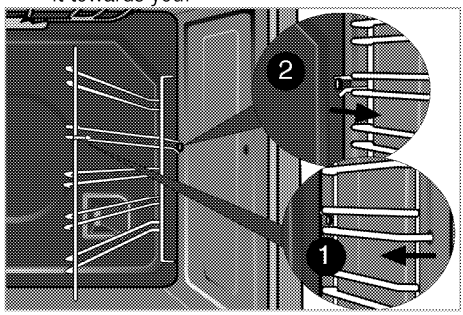

Catalytic walls

Side walls or just back wall of oven interior may be covered with catalytic enamel.
The catalytic walls of the oven must not be cleaned. The porous surface of the walls is self-

cleaning by absorbing and converting spitting fat (steam and carbon dioxide).

Clean oven door

To clean the oven door, use warm water with washing liquid, a soft cloth or sponge to clean the product and wipe it with a dry cloth.

Don't use any harsh abrasive cleaners or sharp metal scrapers for cleaning the oven door. They could scratch the surface and destroy the glass.

Removing the upper oven door

1. Open the front door (1).
2. Open the clips at the hinge housing (2) on the right and left hand sides of the front door by pressing them down as illustrated in the figure.

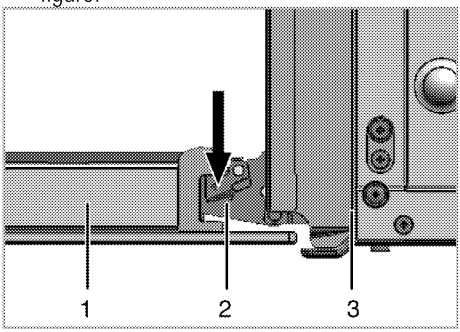

1 Front door
2 Hinge
3 Oven

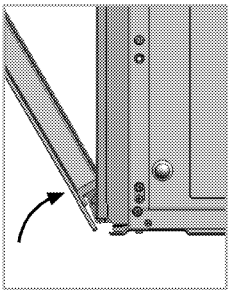

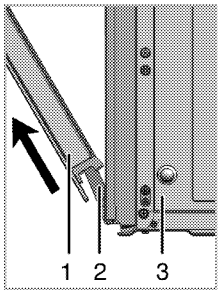

3. Move the front door to half-way.
4. Remove the front door by pulling it upwards to release it from the right and left hinges.

Steps carried out during removing process should be performed in reverse order to install the door. Do not forget to close the clips at the hinge housing when reinstalling the door.

Removing the door inner glass

- Open the oven door.
- Remove the metal part (1) by removing two screws that secure it.
- To remove the plastic holders (2) , use a flat metal or plastic, e.g., a knife, slotted screwdriver, to free the fixing foot (5). Push the fixing foot through the window (6) in arrow direction.

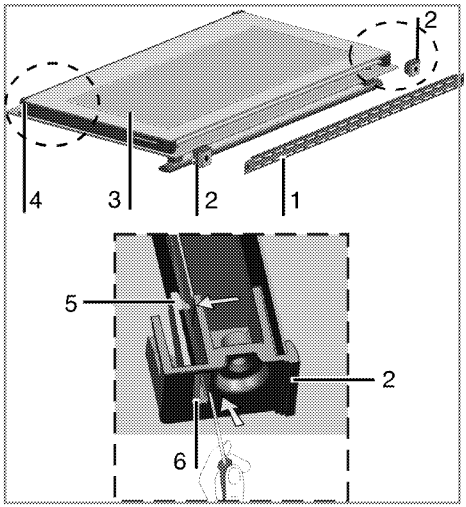

1 Metal part
2 Plastic carrier
3 Inner glass panel
4 Lower plastic slot
5 Fixing foot
6 Window

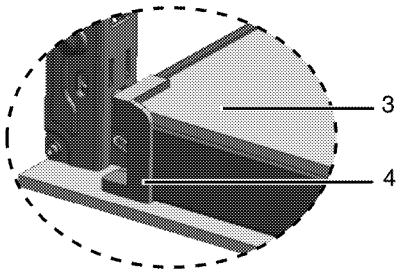

- Pull the inner glass panel (3) towards yourself until it detaches from its plastic slots (4).
- When reinstalling the glass panel, make sure that it is seated into the plastic slots.

Replacing the oven lamp

DANGER:
Before replacing the oven lamp, make sure that the product is disconnected from mains and cooled down in order to avoid the risk of an electrical shock.
Hot surfaces may cause burns!

The oven lamp is a special electric light bulb that can resist up to 300 °C. See *Technical specifications, page 12* for details. Oven lamps can be obtained from Authorised Service Agents or technician with licence.

Position of lamp might vary from the figure.

If your oven is equipped with a round lamp:

1. Disconnect the product from mains.
2. Turn the glass cover counter clockwise to remove it.

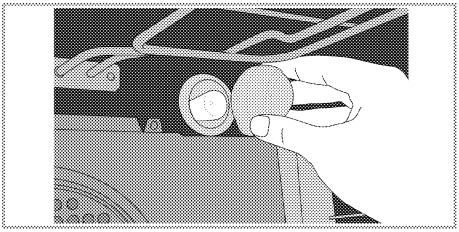

3. Remove the oven lamp by turning it counter clockwise and replace it with the new one.
4. Install the glass cover.

8 Troubleshooting

Oven emits steam when it is in use.

- It is normal that steam escapes during operation. >>> *This is not a fault.*

Product emits metal noises while heating and cooling.

- When the metal parts are heated, they may expand and cause noise. >>> *This is not a fault.*

Product does not operate.

- The mains fuse is defective or has tripped. >>> *Check fuses in the fuse box. If necessary, replace or reset them.*
- Product is not plugged into the (grounded) socket. >>> *Check the plug connection.*
- Buttons/knobs/keys on the control panel do not function. >>> *Keylock may be enabled. Please disable it. (See.)*

There is no ignition spark.

- No current. >>> *Check fuses in the fuse box.*
- Time is not set. >>> *Set the time.*

There is no gas.

- Main gas valve is closed. >>> *Open gas valve.*
- Gas pipe is bent. >>> *Install gas pipe properly.*

Burners are not burning properly or at all.

- Burners are dirty. >>> *Clean burner components.*
- Burners are wet. >>> *Dry the burner components.*
- Burner cap is not mounted safely. >>> *Mount the burner cap properly.*
- Gas valve is closed. >>> *Open gas valve.*
- Gas cylinder is empty (when using LPG). >>> *Replace gas cylinder.*

Baking takes too long.

Pipe pressure is low. >>> *Adjust a higher gas mark.*

(In models with timer) Clock display is blinking or clock symbol is on.

- A previous power outage has occurred. >>> *Adjust the time / Switch of the product and switch it on again.*

Consult the Authorised Service Agent or technician with licence or the dealer where you have purchased the product if you can not remedy the trouble although you have implemented the instructions in this section. Never attempt to repair a defective product yourself.

9 Guarantee and Service

Your Cooker is guaranteed against manufacturing defects from the date of original purchase.
Freestanding Appliances: 1 year
Built-In Appliances: 2 year

What is covered?

- Repairs necessary as a result of faulty materials, defective components or manufacturing defects.
- The cost of functional replacement parts, but excluding consumable items.
- The labour cost of a Leisure Consumer Products approved repairer to carry out the repair.

What is not covered?

- Transit, delivery or accidental damage or misuse and abuse.
- Cabinet or appearance parts, including knobs, flaps, handles or container lids.
- Accessories or consumable items including but not limited to filters and light bulbs.
- Repairs required as a result of unauthorized repair or inexpert installation that fails to meet the requirements contained in the user instruction book.
- Repairs to products used on commercial or non-residential household premises.

Important notes

- Your Leisure Consumer Product is designed and built for domestic household use only.
- The guarantee will be void if the product is installed or used in commercial or non-residential domestic household premises.
- The product must be correctly installed, located and operated in accordance with the instructions contained in the User Instruction Booklet provided.
- Professional installation by a qualified Electrical Domestic Appliance Installer is recommended for all Washing Machines, Dishwashers, Electric Cookers and Cooker Hoods.
- Gas Cookers must only be installed by a Gas Safe (or BORD GAIS) registered Gas Installer.
- The guarantee is given only within the boundaries of the United Kingdom and the Republic of Ireland.
- The guarantee is applicable only to new products and is not transferable if the product is resold.
- Leisure Consumer Products disclaims any liability for incidental or consequential damages.
- The guarantee does not diminish your statutory or legal rights.

Please keep your purchase receipt or other proof of purchase in a safe place; you will need to have it should the product require attention under guarantee.

You should also complete the details below; it will help us assist you when requesting service. (The model is printed on the Instruction Booklet and Serial Number is printed on the Rating Label affixed to the appliance)

Model No: _____ Serial No: _____

Retailer: _____ Date of purchase: _____

For service under guarantee simply telephone the appropriate number below

UK Mainland & Northern Ireland

Fridges & Freezers	0845 600 4903/ 0345 600 4903
Electric Cookers	0845 600 4921/ 0345 600 4921
Gas & Dual Fuel Cookers	0845 600 4921/ 0345 600 4921
Washing Machines & Dishwashers	0845 600 4906/ 0345 600 4906

Republic of Ireland

All Refrigeration, All Cookers, Washing Machines & Dishwashers 01862 34 11

Before requesting service please check the trouble-shooting guide in the Operating Instructions as a charge may be levied where no fault is found even though your product may still be under guarantee.

Service once the manufacturer's guarantee has expired

If you have purchased an extended guarantee please refer to the instructions contained within the extended guarantee agreement document. Otherwise please call the appropriate number above where service can be obtained at a charge.

Should you experience any difficulty in obtaining service please contact the Leisure Consumer Products Customer Help-Line.

Tel: 0845 600 4918/ 0345 600 4918 e-mail: service@leisurecp.co.uk

Leisure Consumer Products
1 Greenhill Crescent
Watford
Herts WD18 8QU
Tel: 0845 6004916/0345 6004916
Facsimile: 0845 6004922
www. Leisurecp.co.uk

Part no. 285.3023.84/R.AA/13.05.2014