Refrigerator

User manual

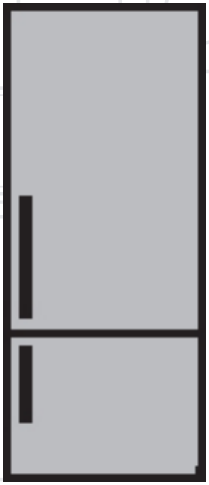

CFP1691DX
CFP1691DS
CFP1691DB
CFP1691DW

CFE1691DB

EN

Please read this manual first!

Dear Customer,

We hope that your product, which has been produced in a 1st-class manufacturing facility and checked under the most meticulous quality control procedures, will provide you with years of good service.

For this, we recommend you to carefully read the entire manual of your product before using it and keep it at hand for future reference.

This manual

- Will help you use your appliance quickly and safely.
- Read the manual before installing and operating your product.
- Follow the instructions, especially those for safety.
- Keep the manual in an easily accessible place as you may need it later.
- Besides, read also the other documents provided with your product.

Please note that this manual may be valid for other models as well.

Symbols and their descriptions

This instruction manual contains the following symbols:

Important information or useful usage tips.

Warning against dangerous conditions for life and property.

Warning against electric voltage.

1 Your refrigerator 3

2 Warnings 4

Electrical requirements....6
Warning! This appliance must be earthed....6
Energy saving tips....7
Compliance with WEEE Directive and Disposing of the Waste Product: 8
Compliance with rohs directive: 8
Package information....8

3 Installation 9

Points to be considered when re-transporting your refrigerator....9
Before operating your refrigerator....9
Electric connection....9
Disposing of the packaging....10
Disposing of your old refrigerator....10
Placing and Installation....10
Transportation Instructions....11
Changing the illumination lamp 12
Installation Instructions....12

4 Before operating 14

Final Check....14

5 Using your refrigerator 15

Temperature Control And Adjustment....15
Thermostat setting button....15
Storing Frozen Food....16
Freezing Fresh Food....16
Making Ice Cubes....16
Defrosting....16
Chiller Compartment....18
Using the water dispenser....18
Filling the water dispenser's tank....18
Cleaning the water tank 19
Drip tray....20

6 Maintenance and cleaning 21

7 Do's and Don'ts 22

Problem Solving....23

8 Guarantee Details 24

9 How To Obtain Service 25

1 Your refrigerator

Congratulations on your choice of a **Beko** quality Appliance which has been designed to give you service for many years.

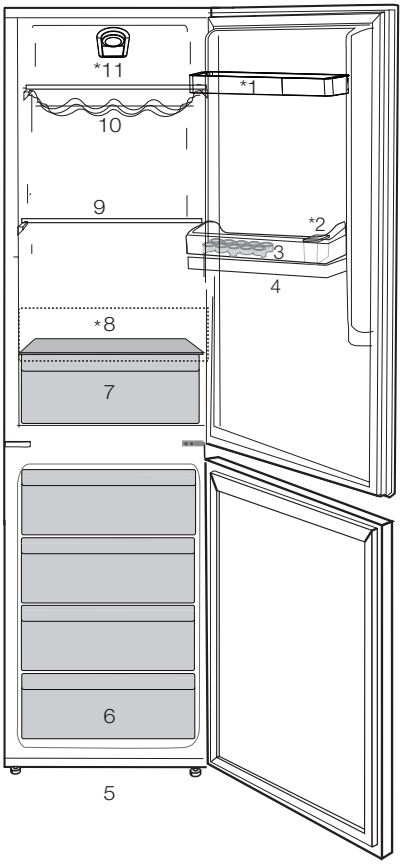

1. Adjustable door shelves
2. Water dispenser filling tank
3. Egg section
4. Water dispenser reservoir
5. Adjustable Front Feet
6. Freezing and Storage (store fresh food to be frozen lower down)
7. Vegetable compartment
8. Chiller compartment
9. Adjustable shelves
10. Wine rack
11. Therm0ostat knob

Figures that take place in this instruction manual are schematic and may not correspond exactly with your product. If the subject parts are not included in the product you have purchased, then it is valid for other models.

2 Warnings

- Do not connect your appliance to the electricity supply until all packing and transit protectors have been removed.
- If transported horizontally leave to stand upright for at least 4 hours before switching on to allow compressor oil to settle
- If you are discarding an old refrigerator with a lock or latch fitted to the door, disable the lock/ latch, ensure that it is left in a safe condition to prevent the entrapment of young children.
- This fridge/freezer must only be used for its intended purpose i.e the storing and freezing of edible foodstuff.
- Do not dispose of the appliance on a fire. At **Beko**, the care and protection of our environment is an ongoing commitment. This appliance which is among the latest range introduced is particularly environment friendly. Your appliance contains non CFC / HFC natural substances in the cooling system (Called R600a) and in the insulation (Called cyclopentane) which are potentially flammable if exposed to fire. Therefore, take care not to damage, the cooling circuit / pipes of the appliance in transportation and in use. In case of damage do not expose the appliance to fire or potential ignition source and immediately ventilate the room where the appliance is situated.
- We suggest you contact your local authority for disposal information and facilities available.
- See Installation Instructions on page 11 for information on suitable location.

- To obtain the best possible performance and trouble free operation from your appliance it is very important to carefully read these instructions.
- On delivery, check to make sure that the product is not damaged and that all the parts and accessories are in perfect condition.
- Ensure that the plug remains readily accessible. Do not use multiple adapter or extension cable.
- Failure to observe these instructions may invalidate your right to free service during the guarantee period.
- Keep ventilation openings, in the appliance enclosure or in the built-in structure, clear of obstruction.
- Do not damage the refrigerant circuit.
- Do not use electrical appliances inside the food storage compartments of the appliance, unless they are of the type recommended by the manufacturer.
- We suggest you keep these instructions in a safe place for easy reference.
- This appliance can be used by children aged from 8 years and above and persons with reduced physical, sensory or mental capabilities or lack of experience and knowledge if they have been given supervision or instruction concerning use of the appliance in a safe way and understand the hazards involved. Children shall not play with the appliance. Cleaning and user maintenance shall not be made by children without supervision.
- Children should be supervised to ensure that they do not play with the appliance.

Electrical requirements

Before you insert the plug into the wall socket make sure that the voltage and the frequency shown on the rating plate inside the appliance corresponds to your electricity supply.

Rating label is on the left hand side of fridge inner liner.

We recommend that this appliance be connected to the mains supply via a suitable switched and fused socket. The appliance must be positioned so that the plug is accessible.

WARNING:

When positioning the appliance ensure the supply cord is not trapped or damaged.

Should the mains lead of the appliance become damaged or should it need replacing at any time, it must be replaced by a special purpose made mains lead which can only be obtained from a **Beko** authorised service agent.

Warning! This appliance must be earthed

If the fitted moulded plug is not suitable for your socket, then the plug should be cut off and an appropriate plug fitted. Destroy the old plug which is cut off as a plug with bared cord could cause a shock hazard if inserted into a socket elsewhere in the house.

The moulded plug on this appliance incorporates a 13 A fuse. Should the fuse need to be replaced an ASTABEAB approved BS 1362 fuse of the same rating must be used. Do not forget to refit the fuse cover. In the event of losing the fuse cover the plug must not be used until a replacement fuse cover has been fitted.

Colour of the replacement fuse cover must be the same colour as that visible on the pin face of the plug. Fuse covers are available from any good electrical store.

Important! Fitting A Different Plug

1. As the colours of the wires in the mains lead of this appliance may not correspond with the coloured markings identifying the terminals in your plug proceed as follows: (See diagram).
2. Connect the green-yellow or green (Earth) wire to the terminal in the plug marked 'E' or with the symbol ⏚ or coloured green and yellow or green.
3. Connect the blue (Neutral) wire to the terminal in the plug marked 'N' or coloured black.
4. Connect the brown (Live) wire to the terminal in the plug marked 'L' or coloured red.
5. With alternative plugs a 13 A fuse must be fitted either in the plug or adaptor or in the main fuse box. If in doubt contact a qualified electrician.

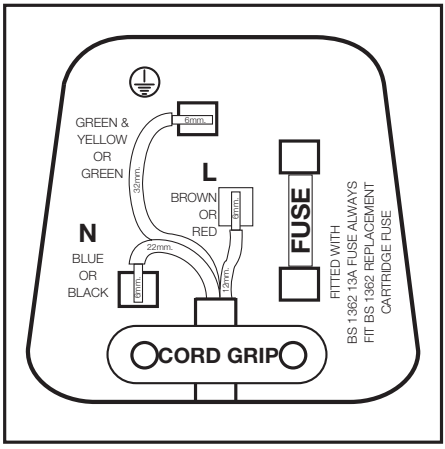

Energy saving tips

1. Ensure your appliance is installed in a well ventilated area.
2. Ensure the time between buying chilled/ frozen food and placing them in your appliance is kept at minimum, particularly in summer. We recommend you use a cool bag or a special carrier bag to carry perishable food.
3. Do not leave the door (s) of your appliance open longer than necessary and ensure they are closed properly after each opening.

4. Defrost frozen food in the fridge compartment, so that frozen food acts as an ice pack to assist cooling in the fridge.
5. Energy consumption of this appliance is measured while freezer compartment is loaded without use of top shelf lid and the drawers except the bottom drawer. It is advised that freezer compartment is loaded without use of drawers except the bottom drawer in order to achieve maximum loading capacity.

Compliance with WEEE Directive and Disposing of the Waste Product:

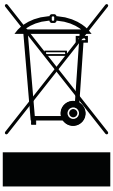

This product complies with EU WEEE Directive (2012/19/EU). This product bears a classification symbol for waste electrical and electronic equipment (WEEE).This product has been manufactured with high quality parts and materials which can be reused and are suitable for recycling. Do not dispose of the waste product with normal domestic and other wastes at the end of its service life. Take it to the collection center for the recycling of electrical and electronic equipment. Please consult your local authorities to learn about these collection centers.

Compliance with rohs directive:

The product you have purchased complies with EU RoHS Directive (2011/65/EU). It does not contain harmful and prohibited materials specified in the Directive.

Package information

Packaging materials of the product are manufactured from recyclable materials in accordance with our National Environment Regulations. Do not dispose of the packaging materials together with the domestic or other wastes. Take them to the packaging material collection points designated by the local authorities.

3 Installation

Please remember that the manufacturer shall not be held liable if the information given in the instruction manual is not observed.

Points to be considered when re-transporting your refrigerator

1. Your refrigerator must be emptied and cleaned prior to any transportation.

2. Shelves, accessories, crisper and etc. in your refrigerator must be fastened securely by adhesive tape against any jolt before repackaging.

3. Packaging must be must be adequate and the rules of transportation printed on the package must be followed.

Please do not forget...

Every recycled material is an indispensable source for the nature and for our national resources.

If you wish to contribute to recycling the packaging materials, you can get further information from the environmental bodies or local authorities.

Before operating your refrigerator

Before starting to use your refrigerator check the following:

1. Is the interior of the refrigerator dry and can the air circulate freely in the rear of it?

2. Please install the 2 plastic wedges as illustrated in the figure. Plastic wedges will provide the required distance between your refrigerator and the wall in order to allow the air circulation. (The illustrated figure is only an example and does not match exactly with your product.)

3. Clean the interior of the refrigerator as recommended in the "Maintenance and cleaning" section.

4. Plug the refrigerator into the wall outlet. When the fridge door is open, the fridge compartment interior light will come on.

5. You will hear a noise as the compressor starts up. The liquid and gases sealed within the refrigeration system may also give rise to noise, even if the compressor is not running and this is quite normal.

6. Front edges of the refrigerator may feel warm. This is normal. These areas are designed to be warm to avoid condensation

Electric connection

Connect your product to a grounded socket which is being protected by a fuse with the appropriate capacity.

Important:

- The connection must be in compliance with national regulations.
- The power cable plug must be easily accessible after installation.
- The specified voltage must be equal to your mains voltage.
- Extension cables and multiway plugs must not be used for connection.

A damaged power cable must be replaced by a qualified electrician.

Product must not be operated before it is repaired! There is danger of electric shock!

Disposing of the packaging

The packing materials may be dangerous for children. Keep the packing materials out of the reach of children or dispose of them by classifying them in accordance with the waste instructions. Do not dispose of them along with the normal household waste.

The packing of your refrigerator is produced from recyclable materials.

Disposing of your old refrigerator

Dispose of your old refrigerator without giving any harm to the environment.

- You may consult your authorised dealer or waste collection center of your municipality about the disposal of your refrigerator.

Before disposing of your refrigerator, cut out the electric plug and, if there are any locks on the door, make them inoperable in order to protect children against any danger.

Placing and Installation

If the entrance door of the room where the refrigerator will be installed is not wide enough for the refrigerator to pass through, then carefully remove the doors of your refrigerator and pass it sideways through the door.

1. Install your refrigerator to a place that allows ease of use.

2. Keep your refrigerator away from heat sources, humid places and direct sunlight.

3. There must be appropriate air ventilation around your refrigerator in order to achieve an efficient operation. If the refrigerator is to be placed in a recess in the wall, there must be at least 5 cm distance with the ceiling and at least 5 cm with the wall. If the floor is covered with a carpet, your product must be elevated 2.5 cm from the floor.

4. Place your refrigerator on an even floor surface to prevent jolts.

5. This appliance is equipped with 'Freezer Guard' which ensures that at the advised setting [4 - four on the control] the frozen food in the freezer will not defrost even if the ambient temperature falls as low as -15 °C. So you may then install your appliance in a garage or an unheated room without having to worry about frozen food in the freezer being spoilt. However at low ambient temperatures mentioned above, fridge contents are likely to freeze, so check and consume food in the fridge accordingly. When the ambient temperature returns to normal, you may change the setting to suit your needs.

Transportation Instructions

1. The appliance should be transported only in a vertical upright position. The packing as supplied must be intact during transportation.

2. If during the course of transport the appliance has to be transported horizontally, it must only be laid on its right hand side when standing in the frontof the appliance. After bringing it to upright position,it must not be operated for at least 4 hours to allow the system to settle.

3. Failure to comply with the above instructions could result in damage occuring to the appliance. The manufacturer will not be held responsible if these instructions are disregarded.

4. The appliance must be protected against rain, moisture and other atmospheric influences.

5. When positioning your appliance take care not to damage your flooring, pipes, wall coverings etc. Do not move the appliance by pulling by the door or handle.

6. Empty any water in the drain tray before moving. See section 'Defrosting' and 'Care & cleaning' for further information.

7. Make sure that the defrost water pipe at the back of the product is fixed to the plastic evaporating pan on the top of the compressor, to avoid defrost water spillage on the floor.

8. The appliance must be protected against rain, moisture and other atmospheric influences.

Important: Care must be taken while cleaning / carrying the appliance to avoid touching the bottom of the condenser metal wires at the back of theappliance as you might injure your fingers and hands.

Important: This appliance is not designed for stacking with any otherappliance.When positioning your appliance, take care not to damage your flooring, pipes,wall coverings etc.

Important: Care must be taken while cleaning / carrying the appliance to avoid touching the bottom of the condenser metal wires at the back of the appliance as you might injure your fingers and hands.

Do not attempt to sit or stand on top of your appliance as it is not designed for such use. You could injure yourself or damage the appliance.

Important: Make sure that mains cable is not caught under the appliance during and after carrying / moving the appliance, to avoid the mains cable becoming cut or damaged."Do not allow children to play with the appliance or tamper with the controls.

Beko declines to accept any liability should the instructions not be followed.

Installation Instructions

1. Fit the two plastic wall spacers supplied onto the condenser at the back of the appliance by rotating 1/4 turn.

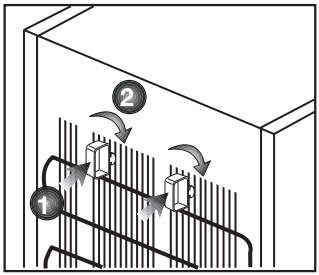

2. Locate the appliance on a smooth surface.

3. To ensure it is standing upright adjust the two front feet by turning clockwise or anti-clockwise, until it is in firm contact with the floor. Correct adjustment of feet avoids excessive vibration and noise.

4. A special receptacle is supplied to store the mains plug during transit. The receptacle is fixed at the back of the cabinet on the side of the compressor. Gently remove the plug from the receptacle. Never pull the mains cord, you may damage the appliance. In case of transportation, ensure you locate the plug in the receptacle provided to avoid transit damage.I believe we should say somewhere that you can install in a garage or outhouse.

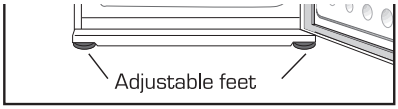

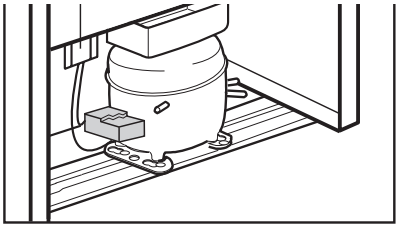

5. The space in the room where the appliance is installed must not be smaller than 10 cubic metres.

Changing the illumination lamp

To change the Bulb/LED used for illumination of your refrigerator, call your AuthorisedService.

The lamp(s) used in this appliance is not suitable for household room illumination. The intended purpose of this lamp is to assist the user to place foodstuffs in the refrigerator/ freezer in a safe and comfortable way.The lamps used in this appliance have to withstand extreme physical conditions such as temperatures below -20 °C.

(only chest and upright freezer)

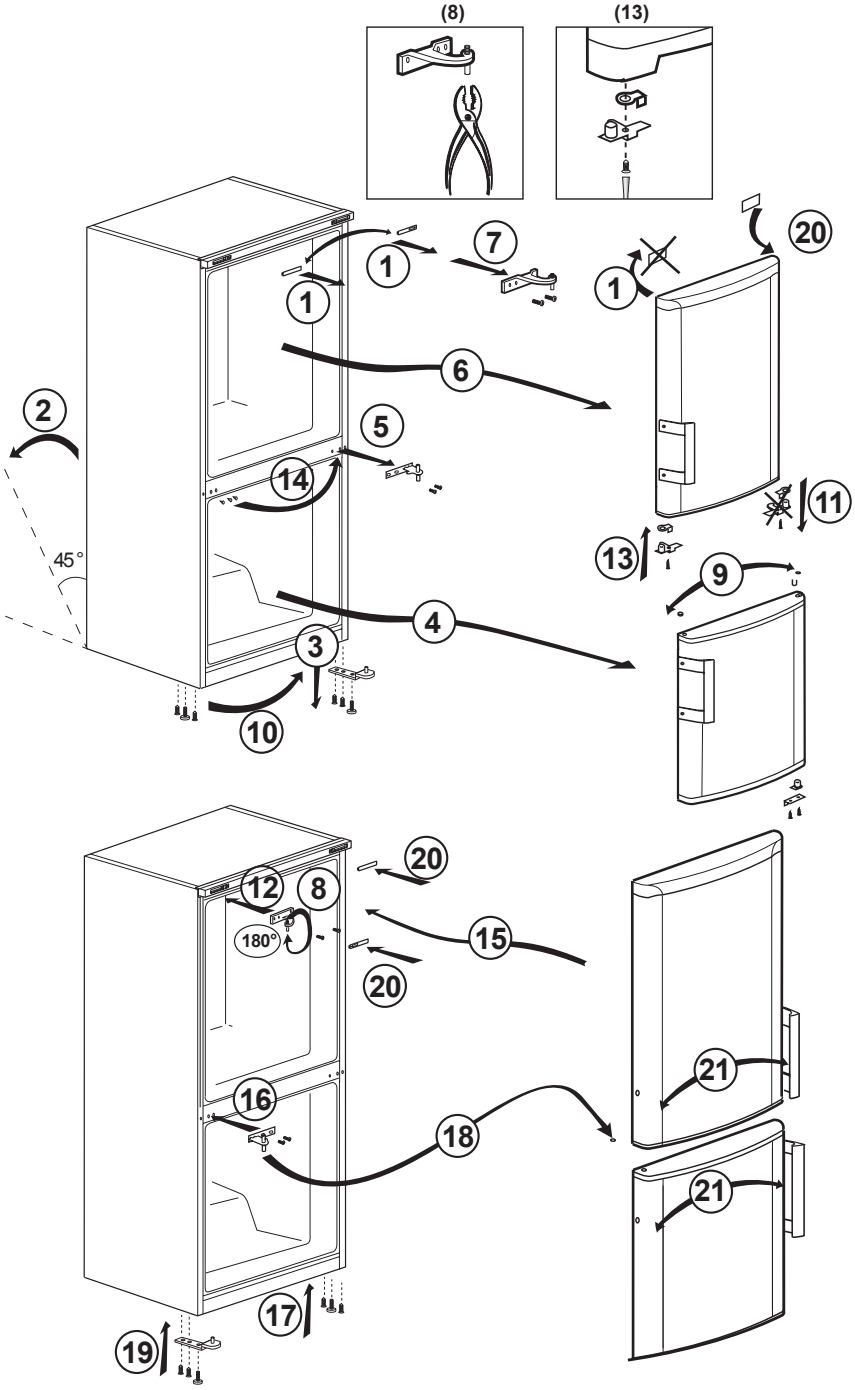
(8)
(13)
1
1
7
1
20
6
2
5
14
45°
11
13
9
4
3
10
20
12
8
180°
15
20
21
16
18
21
17
19

4 Before operating

Final Check

Before you start using the fridge/ freezer check that:

1. The feet have been adjusted for perfect levelling.

2. The interior is dry and air can circulate freely at the rear of the cabinet.

3. Clean the interior as recommended under "CLEANING AND CARE."

4. Insert the plug into the wall socket and switch on the electricity supply.

5. When the door is open the fridge interior light will come on.

6. You will hear a noise as the compressor starts up. The liquid and gases sealed within the refrigeration system may also give rise to noise, whether the compressor is running or not which is quite normal."Due to operation of the fan inside the frost free freezer compartment, overall noise level is slightly higher in comparison to non-frost free appliances. This is quite normal and is not a fault."

7. Set the setting knob half way between min and max.

8. Front edges of the cabinet may feel warm. This is normal. These areas are designed to be warm to avoid condensation.

9. "Do not load the appliance immediately it is switched on. Wait until the correct storage temperature has been reached. We recommend that you check the temperature with an accurate thermometer (see; Temperature Control and Adjustment)"

5 Using your refrigerator

Temperature Control And Adjustment

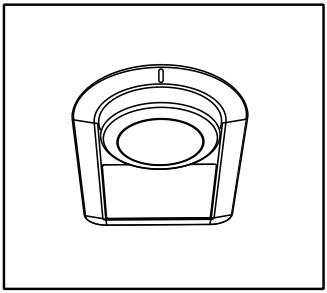

The operating temperature is regulated by the temperature control.

1=Lowest cooling setting (Warmest setting).

5=Highest cooling setting (Coldest setting).

The average temperature inside the fridge should be around +5°C.

Please choose the setting according to the desired temperature.

Please note that there will be different temperatures in the cooling area.

The coldest region is immediately above the vegetable compartment.

The interior temperature also depends on ambient temperature, the frequency with which the door is opened and the amount of foods kept inside.

Frequently opening the door causes the interior temperature to rise.

For this reason, it is recommended to close the door again as soon as possible after use.

Thermostat setting button

The interior temperature of your refrigerator changes for the following reasons;

- Seasonal temperatures,
- Frequent opening of the door and leaving the door open for long periods,
- Food put into the refrigerator without cooling down to the room temperature,
- The location of the refrigerator in the room (e.g. exposing to sunlight).
- You may adjust the varying interior temperature due to such reasons by using the thermostat. Numbers around the thermostat button indicates the cooling degrees.
- If the ambient temperature is higher than 25°C, turn the thermostat button to maximum position.
- If the ambient temperature is lower than 25°C, turn the thermostat button to minimum position.

Storing Frozen Food

Prepacked commercially frozen food should be stored in accordance with the frozen food manufacturer's instructions for a frozen food storage compartment.

To ensure that the high quality achieved by the frozen food manufacturer and the food retailer is maintained, the following should be remembered:

1. Put packets in the freezer as quickly as possible after purchase.
2. Ensure that contents are labelled and dated.
3. Do not exceed "Use By", "Best Before" dates on the packaging. If there is a power failure do not open the door. Frozen food should not be affected if the failure lasts for less than 21 hrs. If the failure is longer, then the food should be checked and either eaten immediately or cooked and then re-frozen.

Freezing Fresh Food

Please observe the following instructions to obtain the best results.

Do not freeze too large a quantity at any one time. The quality of the food is best preserved when it is frozen right through to the core as quickly as possible.

Do not exceed the freezing capacity of your appliance in 24 h which is 5 kg

Placing warm food into the freezer compartment causes the refrigeration compressor to operate continuously until the food is frozen solid. This can temporarily lead to excessive cooling of the refrigeration compartment.

When freezing fresh food turn the control toward MAX. Small quantities of food up to 1/2 kg. (1 lb) can be frozen without having to rotate the temperature control.

Install in room -15C to +32C .

You may place fresh food to be frozen in any part of the freezer.

Take special care not to mix already frozen food and fresh food.

Making Ice Cubes

Fill the ice - cube tray 3/4 full with water and place it in the Ice Bank. Loosen frozen trays with the handle of a spoon, never use sharp edged objects such as knives, forks. Store ice-cubes in the Ice Bank.

Note: If freshly made ice cubes are not consumed for several weeks and stored in Ice Bank, they will slowly reduce in size and eventually disappear completely.

Defrosting

A) Fridge Compartment

The fridge compartment defrosts automatically. The defrosting water runs to the drain tube via a collection container at the back of the appliance (1). (see diagram) During defrosting water droplets may form at the back of the fridge compartment where concealed evaporator is located. Some droplets may remain on the liner and refreeze when defrosting is completed. Do not allow items in the fridge to touch the back wall as the water droplets will make them wet. Do not use pointed or sharp edged objects such as knives, forks to remove the droplets which have frozen.

If at any time the defrost water does not drain from the collection channel, check to ensure that no food particles have blocked the drain tube. The drain tube can be cleared by pushing the special plastic plunger provided down the drain tube (2). If the frost layer reaches about 1/4"(7 mm), reduce the setting (i.e. from 4 to 1) to restart automatic defrosting.

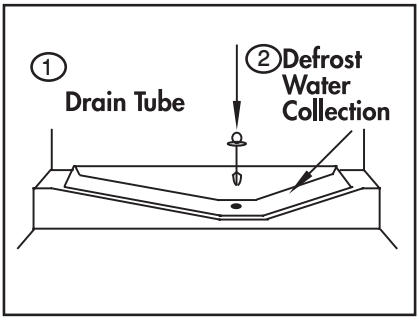

B) Freezer Compartment

The freezer compartment defrosts automatically.

Warnings!

- The fan inside the freezer compartment circulates cold air. Never insert any object through the guard. Do not allow children to play with the freezer fan.
- Never store products that contain inflammable propellant gas (eg dispensers, spray cans etc.) or explosive substances.
- Don't cover the shelves with any protective materials, which may obstruct air circulation.
- Do not allow children to play with the appliance or tamper with the controls.

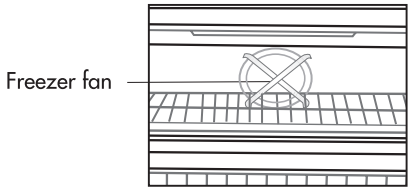

- Maximum frozen food storage volume is achieved without using the drawers and the upper shelf cover provided in the freezer compartment. Energy consumption of your appliance is declared while the freezer compartment is fully loaded on shelves without the use of the drawers and upper shelf cover. Use the given wire shelf at the bottom of the freezer compartment for a better energy consumption performance.
- It is recommended that you place foodstuffs on top shelf of freezer for initial freezing.
- It is advised that provided cold packs are used as described below prior to using quick freeze function. It improves storage and quick - freezing performance of your freezer compartment.

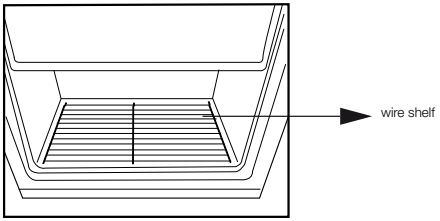

Chiller Compartment

By the help of 0 °C compartment you can keep your meat, fish and wrapped food 2-3 times longer than a standard fridge compartment.

Air inside this compartment is drier than other zones.

The average temperature inside this compartment is around 0 °C.

Do not store fruits and vegetables in this compartment.

Using the water dispenser

***optional**

	It is normal for the first few glasses of water taken from the dispenser to be warm.
	If the water dispenser is not used for a long period of time, dispose of first few glasses of water to obtain fresh water.

1. Push in the lever of the water dispenser with your glass. If you are using a soft plastic cup, pushing the lever with your hand will be easier.
2. After filling the cup up to the level you want, release the lever.

	Please note, how much water flows from the dispenser depends on how far you depress the lever. As the level of water in your cup / glass rises, gently reduce the amount of pressure on the lever to avoid overflow. If you slightly press the arm, the water will drip; this is quite normal and not a failure.

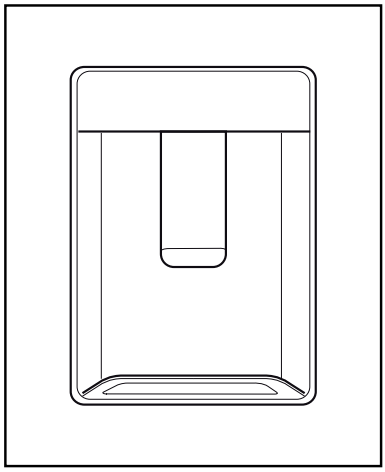

Filling the water dispenser's tank

Water tank filling reservoir is located inside the door rack.

1. Open the cover of the tank.
2. Fill the tank with fresh drinking water.
3. Close the cover.

	Do not fill the water tank with any other liquid except for water such as fruit juices, carbonated beverages or alcoholic drinks which are not suitable to use in the water dispenser. Water dispenser will be irreparably damaged if these kinds of liquids are used. Warranty does not cover such usages. Some chemical substances and additives contained in these kinds of drinks/liquids may damage the water tank.
	Use clean drinking water only.

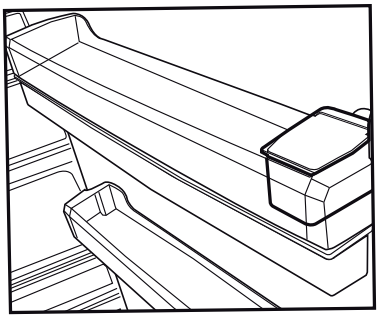

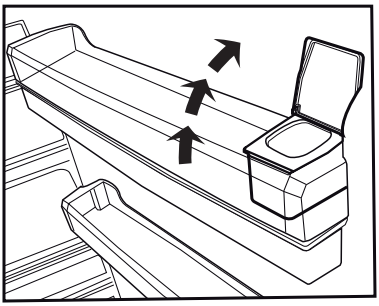

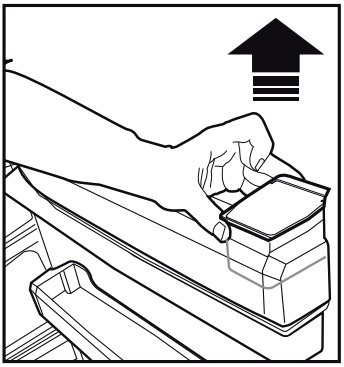

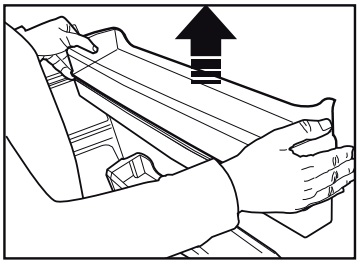

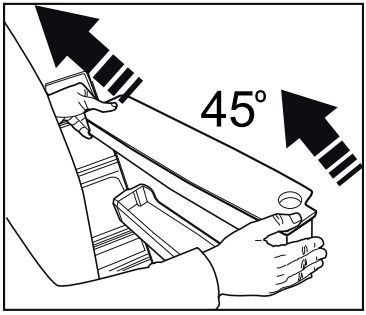

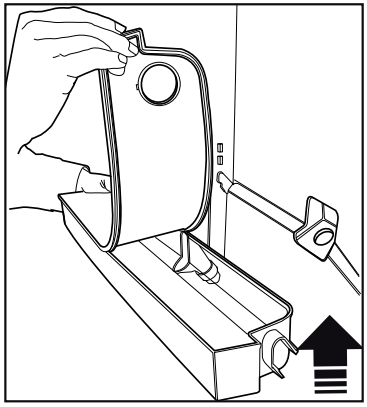

Capacity of the water tank is 3 litres; do not overfill.

Cleaning the water tank

1. Remove the water filling reservoir inside the door rack.
2. Remove the door rack by holding from both sides.
3. Grab the water tank from both sides and remove it with an angle of 45°C.
4. Remove the cover of the water tank and clean the tank.

Components of the water tank and water dispenser should not be washed in dishwasher.

Drip tray

Water that dripped while using the water dispenser accumulates in the spillage tray.

Remove the plastic filter as shown in the figure.

With a clean and dry cloth, remove the water that has accumulated.

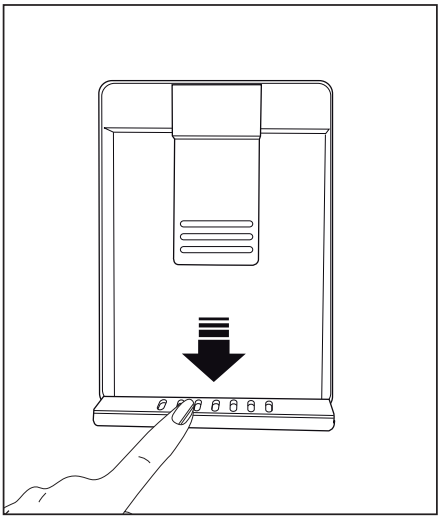

6 Maintenance and cleaning

- We recommend that you switch off the appliance at the socket outlet and pull out the mains plug before cleaning.
- Never use any sharp abrasive instrument, soap, household cleaner, detergent and wax polish for cleaning.
- Use luke warm water to clean the cabinet of the appliance and wipe it dry.
- Use a damp cloth wrung out in a solution of one teaspoon of bicarbonate of soda to one pint of water to clean the interior and wipe it dry.
- Make sure that no water enters the lamp housing.
- If the appliance is not going to be used for a long period of time switch it off, remove all food, clean it and leave the door ajar.
- Any dust that gathers on the condenser, which is located at the back of the appliance, should be removed once a year with a vacuum cleaner.
- Check door seals regularly to ensure they are clean and free from food particles.
- Removal of door tray
- To remove door racks, remove all the contents and then simply push the door rack upwards from the base.
- To remove a freezer drawer, pull it as far as possible, and then tilt it upwards, and then pull it out completely.
- To remove the freezer flap door, first open the door 3" and then gently pull it off. Make sure that the flap is in place before closing the freezer door.
- Make sure that the special plastic container (drain tray) at the back of the appliance which collects defrost water is clean at all times. If you want to remove the tray to clean it follow the instructions below :
- Switch off at the socket outlet and pull out the mains plug.
- Push the lug down with the tip of a screw driver & pull out with a jerk movement
- Clean the drain tray and wipe it dry.
- Reassemble reversing the sequence and operations.
- Avoid spillage of food particularly small items like rice, peas, beans through the fan guard as they may cause the cooling system to block and therefore operate less efficiently.

Never use cleaning agents or water that contain chlorine to clean the outer surfaces and chromium coated parts of the product. Chlorine causes corrosion on such metal surfaces.

7 Do's and Don'ts

Do- Clean your appliance regularly (See "Cleaning and Care")
Do- Keep raw meat and poultry below cooked food and dairy products.
Do- Take off any unusable leaves on vegetables and wipe off any soil.
Do- Leave lettuce, cabbage, parsley and cauliflower on the stem.
Do- Wrap cheese firstly in greaseproof paper and then in a polythene bag excluding as much air as possible. For best results take out of the fridge compartment an hour before eating.
Do- Wrap raw meat and poultry loosely in polythene or aluminium foil. This prevents drying.
Do- Wrap fish and offal in polythene bags.
Do- Wrap food which have a strong odour or can dry out in polythene bags, aluminium foil or place in an airtight container.
Do- Wrap bread well to keep it fresh.
Do- Chill white wines, beer, lager and mineral water before serving.
Do- Check contents of the freezer every so often.
Do- Keep food for as short a time as possible and adhere to "Best Before", "Use by" etc. dates.
Do- Store commercially frozen food in accordance with the instructions given on the packets that you buy.
Do- Always choose high quality fresh food and be sure it is thoroughly clean before you freeze it.
Do- Prepare fresh food for freezing in small portions to ensure rapid freezing.
Do- Wrap all food in aluminium foil or freezer quality polythene bags and make sure any air is excluded.
Do- Wrap frozen food when you buy it and put it in to the freezer as soon as possible.
Do- Defrost food in the fridge compartment.
Do- Remove ice cream from the freezer 10-20 minutes before serving.

Don't- Store bananas in your fridge compartment.
Don't- Store melon in your fridge. It can be chilled for short periods as long as it is wrapped to avoid it flavouring other food.
Don't- Store poisonous or any dangerous substances in your appliance. It has been designed for the storage of edible foodstuffs only.
Don't- Consume food which has been stored for an excessive time in the fridge.
Don't- Store cooked and fresh food together in the same container. They should be packaged and stored seperately.
Don't- Let defrosting food or food juices drip onto food.
Don't- Leave the door open for long periods as this will make the appliance more costly to run and cause excessive ice formation.
Don't- Put hot food into the appliance. Let it cool down first.
Don't- Put liquid-filled bottles or sealed cans containing carbonated liquids into the freezer as they may burst.
Don't- Exceed the maximum freezing loads (5 kg in any 24 hours) when freezing fresh food.
Don't- Give children ice-cream and water ices direct from the freezer.

The low temperature may cause 'freezer burns' on lips.

Don't- Freeze fizzy drinks.

Don't- Try to keep frozen food which has thawed, it should be eaten within 24 hours or cooked and refrozen.

Don't- Remove items from the freezer with wet hands.

Don't- Close the freezer door before placing the compartment cover in its place.

Don't- Leave frozen food at room temperature to thaw; the best way to defrost food is to put it in the fridge to thaw slowly. Make sure you avoid defrosting food or food juices drip onto other food.

Problem Solvıng

If the appliance does not operate when switched on, check whether:

- The plug is inserted properly in the socket and that the power supply is on. (To check the power supply to the socket, plug in another appliance)
- The fuse has blown/circuit breaker has tripped/main distribution switch has been turned off.
- The temperature control has been set correctly and not to "0" (OFF)
- New plug is wired correctly if you have changed the fitted moulded plug.

If the appliance is still not operating after the above checks, please refer to the section on "How To Obtain Service".

Please ensure that above checks have been made as a charge will be made if no fault is found.

8 Guarantee Details

GUARANTEE DETAILS

Your new Beko product is guaranteed against the cost of breakdown repair for twelve months from the date of the original purchase.

What is covered?

- Repairs necessary as a result of faulty materials, defective components or manufacturing defect
- The cost of functional replacement parts, but excluding consumable items.
- The labour costs of a Beko approved repairer to carry out the repair.

What is not covered?

- Transit, delivery or accidental damage or misuse and abuse.
- C abinet or appearance parts, including control knobs, flaps, handles or container lids.
- Accessories or consumable items including but not limited to, ice trays, scrapers, cutlery baskets, filters and light bulbs.
- Repairs required as a result of unauthorised repair or inexpert installation that fails to meet the requirements contained in the user instruction book.
- Repairs to products used on commercial or non-residential household premises.
- Loss of frozen food in freezers or fridge/freezers. (Food loss insurance is often included within your household contents insurance policy, or may be available separately from your retailer).

Important notes.

- Your Beko product is designed and built for domestic household use only.
- The guarantee will be void if the product is installed or used in commercial or non-residential domestic household premises.
- The product must be correctly installed, located and operated in accordance with the instructions contained in the User Instructions Booklet provided.
- Professional installation by a qualified Electrical Domestic Appliance Installer is recommended for all Washing Machines, Dishwashers and Electric Cookers
- Gas Cookers must only be installed by a Gas Safe (or BORD GAIS) registered Gas Installer.
- The guarantee is given only within the boundaries of the United Kingdom and the Republic of Ireland.
- The guarantee is applicable only to new products and is not transferable if the product is resold.
- Beko disclaims any liability for incidental or consequential damages. The guarantee does not in anyway diminish your statutory or legal rights.

9 How To Obtain Service

HOW TO OBTAIN SERVICE

Please keep your purchase receipt or other proof of purchase in a safe place; you will need to have it should the product require attention under guarantee.

You should also complete the details below; it will help us assist you when requesting service. (The model number is printed on the Instruction Booklet and the serial number is printed on the Rating Label affixed to the appliance)

Model No: Obtaining service please contact Beko Costumer Help-Line.
Serial No:
Retailer:
Date of purchase: Tel: 0845 6004911 or 0345 6004911

For service under guarantee simply telephone the appropriate number below

UK Mainland & Northern Ireland

Fridges & Freezers	0845 6004903	or	0345 6004903
Electric Cookers	0845 6004902	or	0345 6004902
Gas & Dual Fuel Cookers	0845 6004905	or	0345 6004905
Washing Machines & Dishwashers	0845 6004906	or	0345 6004906

Republic of Ireland

All Refrigeration All Cookers Washing Machines & Dishwashers	01 862 3411

Beforere questing service please check the trouble-shooting guide in the Operating Instructions as a charge may be levied where no fault is found even though your product may still be under guarantee.

Service once the manufacturers guarantee has expired.

If you have purchased an extended guarantee please refer to the instructions contained with in the extended guarantee agreement document. Otherwise please call the appropriate number above where service can be obtained at a charge.

Should you experience any difficulty in obtaining service please contact the Beko Customer Help-Line. Tel: 0845 6004911 e-mail: service@beko.co.uk

BEKO plc
Beko House
1 Greenhill Crescent
Watford
Hertfordshire
WD18 8QU
Tel: 0845 6004911
Fax:0 845 6004922
e-mail:service@beko.co.uk
website: www.beko.co.uk

CE

57 6210 0000/AG