USERS GUIDE

&

INSTALLATION

Dual Fuel Cooker Range

ASPEN 100

AP 10 FRKP

AP 10 FRSP

FINESSE 100

FN 10 FRKP - FN 10 FRSP

FLAVEL

welcome

Dear customer

Congratulations on your choice of a Leisure quality cooker which has been designed to give you lasting service.

The cooker must be installed by a qualified electrician in accordance with current regulations and used in a well ventilated space.

Please read these instructions thoroughly before installing or using - and keep for handy reference. Make sure you understand the controls prior to using your appliance. This cooker must only be used for its intended purpose, ie the cooking of food in the home. Failure to observe these instructions may invalidate your right to free service during the guarantee period.

If you have any questions, or if you are not sure about any information contained in this booklet please contact us - details are on the back cover.

Leisure Customer Service

safety symbols

The use of any electrical appliance and cookers in particular (which use high temperatures) require the following of basic common sense safety rules.

There is a danger of injury to the person and of damage to the cooker, the kitchen and your home.

These are itemised in the first section 'Safety in the home'. Where accidents are most common, we repeat these warnings in the main text using the following symbols:

Where you, other people, toddlers and children are at risk

Where there is a danger of damage to the cooker, utensils, surrounding areas and property

Please note them for your own safety.

Part no. 485.9208.59
rev.AA - 12.12.2009

contents

Introduction

Welcome/Safety symbols 2

Safety in the home 4

Installation

Know your cooker/specification 6

Electrical connection and location 7

Installation 8

Gas conneçtion 9

Gas conversion 10

For the very first time

Preparation and burning off 8

Operating

Operating the hob 11

Saucepan types/deep fat frying 12

Operating the grill 13-14

Operating the conventional oven 15

Operating the fan oven 16

Tips for cooks 17

Operating the clock/ minute minder 18

Cooker care

Care & cleaning 19

Trouble shooting 20

Future transportation 20

Replacing the oven light 20

Guarantee & Service 21

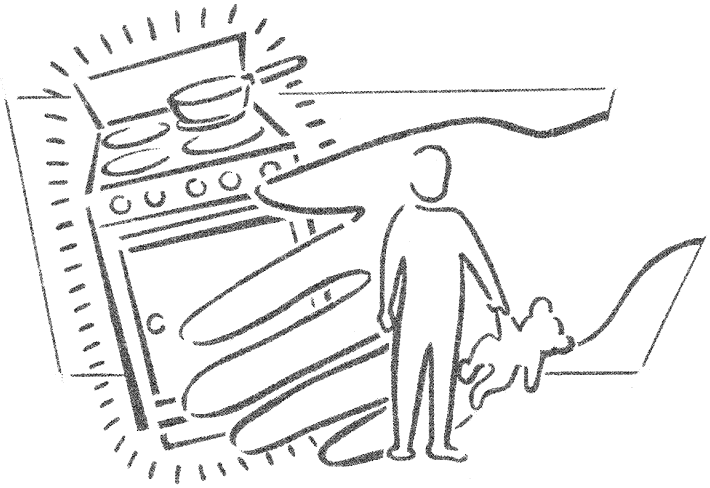

Look after yourself, family and friends

- **Ensure that children are kept away whilst the cooker is in use and until it has cooled as parts become very hot. Don't leave them unsupervised.**
- During use surfaces get hot. Don't touch hot surfaces during use.
- Close supervision while cooking is essential at all times.
- Special care should be taken when cooking oily and fatty food as overheating of such food can cause them to catch fire.
- Always use good quality oven gloves when removing hot utensils and the grill pan from the oven.
- Ensure handles of pans can not accidentally be caught or knocked and do not get heated by adjacent heating zones.
- Check all controls on the appliance are switched off after use.
- Take care when opening the door. Let steam and hot air escape before removing the food.
- Select the correct shelf position before turning the oven or grill on - don't move oven shelves when hot.
- Don't use water to extinguish oil or fat fires.
- Don't heat up unopened food containers as pressure can build up causing the container to burst.
- Don't use round-bottomed traditional woks. Use flat-bottomed types.
- Don't store items above the cooker that children may try to reach.

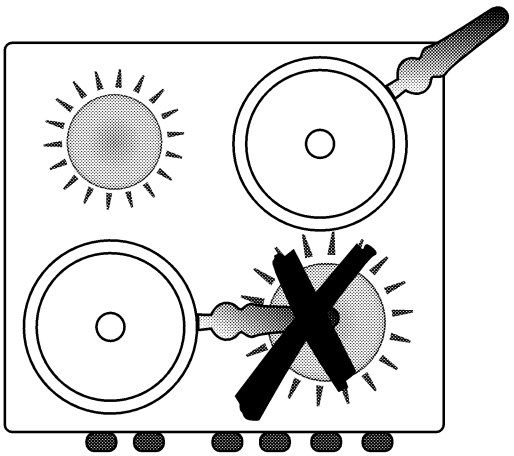

Look after your cooker and home

- Clean your cooker regularly, ideally after each use. Always turn off the mains electricity supply and allow the appliance to cool first.
- Spillage should be dealt with as soon as it occurs, taking due care as the hob surface may be hot. Any spillage left on the surface after cooking should be cleaned off before the hob is switched on again to prevent baking on.
- Don't use biological washing powder or bleach products, harsh abrasives or chemical cleaners for cleaning the oven inner panels.
- Don't allow anyone to sit or stand on the cooker or door.
- Don't move the cooker by pulling by the door and/or handle.
- Don't use large preserving pans or fish kettles across the hob as this will damage the ceramic hob.
- Ensure that no flammable materials are adjacent to the cooker as the sides become hot during use.
- Don't store flammable materials, aerosols etc in adjacent cabinets.
- Don't place flammable or plastic items on or near the hob, and never place wet cloths etc. on the hob to dry.
- Keep all ventilation slots clear of obstructions.
- Don't leave a hob on for long periods when not covered by a pan.
- Don't cover shelves with metal foil as the air circulation in the oven will be disrupted.
- Don't place dishes, pans and/or trays directly on the oven compartment base.
- Don't line the grill pan with aluminium foil. As this could result in an increase risk of fire or damage to your cooker.
- Don't use the cooker with glass panels removed.

Don't use the cooker for

- Hanging towels and dish cloths etc on the handles.
- Warming plates under the grill.
- Heating the kitchen.
- Drying.
- Storage of imflammable materials or liquids in the storage compartment.

Food hygiene

- Ensure meat and poultry is thoroughly defrosted before cooking.
- Check food is thoroughly cooked and is piping hot.

- **Always refer servicing to a qualified appliance service engineer.**

know your cooker

Some of the illustrated details may vary

specification

External dimensions width x depth x height 900mm x 600mm x 1000mm	
Rear-left burner	2.0 kW
Front-left burner	2.0 kW
Front-Center-left burner	2.9 kW
Rear-Center-left burner	1.0 kW
Rear-Center-right burner	2.0 kW
Front-Center-right burner	2.0 kW
Front-right burner	2.9 kW
Rear-right burner	1.0 kW
Supply voltage	230V~ 50Hz
Grill wattage	2 kW
Left hand side oven wattage	1.8 kW
Right hand side oven wattage	1.9 kW

Lamp	15 W x 2
Total power (gas)	15.8 kW
Total power (electric)	5.7 kW
Ignition	Auto electric on all burners
Safety device	Gas valves are lockable

Gas	Supply Pressure	Destination Countries
G20	20 mbar	GB, IE
G31	37 mbar	GB, IE
G30,	28-30 mbar	GB, IE

I 2H AT 20 mbar and I 3P AT 37 mbar

Cat II 2H3+

For Cooker set up condition please refer to rating label

Because we continually strive to improve our products, we may change our specifications and designs without prior notice.

Accuracy

Note that times and temperatures in this book are for guidance only.

electrical connection

- Do not connect the cooker to the electricity supply until all packing and transit protectors have been removed.

1 Before your appliance is connected to the mains electricity supply, check to ensure that the voltage and frequency shown on the rating label corresponds with your power supply. The label is located on the plinth below the oven door.

2 **This product must only be installed by a qualified electrician** eg local electricity company or NICEIC registered contractor to a suitable double-pole control unit with a minimum contact clearance of 3mm in all poles and with a minimum rating of 32A which should be fitted adjacent to (but not above) the cooker in accordance with IEE regulations. **Failure to observe this instruction may result in operational problems and invalidation of the product warranty.**

3 Access to the mains terminal is gained by removing the small rear cover. The cable must have conductors of sufficiently high cross sectional area to prevent overheating and deterioration. Recommended cross-section area is six square millimetres (6.00 mm2). The mains cable must conform to BS6004.
This appliance must be earthed.

4 The mains cable must pass through the cable clamp.

5 The mains cable should be routed away from the appliance and in particular ventilation slots, the vent outlet and should not be obstructed when pushed in to position between the appliance and the wall and/or cabinets.

- The appliance conforms to BS 800: 1988 and EEC directive 87/308 regarding suppression of radio and television interference.
- Type with regard to protection against overheating of surrounding surfaces=X.

location

- Excess steam from the oven is expelled at the rear of the appliance therefore the wall behind the cooker needs to be protected against grease and moisture.
- The cooker is designed to fit between kitchen cabinets spaced over 600 mm apart. The space either side of the cooker need only be sufficient to allow withdrawal of the cooker for servicing. It can be used with cabinets on one side or both sides as well as in a corner setting. It can also be used free-standing.
- Adjacent side walls above the appliance must not be nearer to the cooker than 65 mm and should be of heat resistant material. Leave at least 750 mm clearance above the hob to a cooker hood and 600 mm to any cabinet.

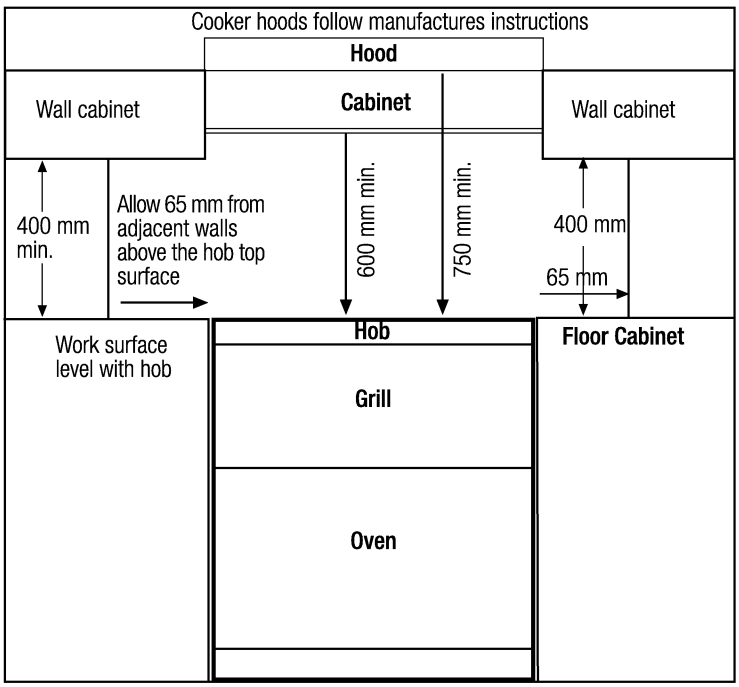

Levelling

The appliance should be located on a level surface. The two front feet can be adjusted as required. To ensure that your appliance is standing level adjust the two front feet by turning clockwise or anticlockwise until the product is in firm contact with the floor.

The cooker should not be placed on a raised Base.

Stability Chain (If available)

The cooker may be secured by a security chain to the wall or partition behind the cooker.

For addition stability.

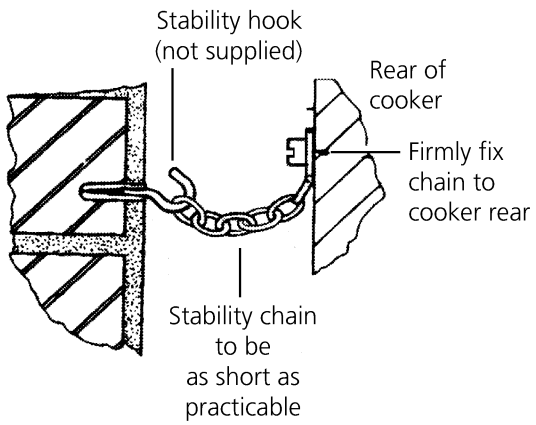

Cooker stability chain for cookers not designed with bracket engagement slot

Release the stability chain as you ease the cooker out. Don't forget to refit it when you replace the cooker.

Lift the front feet clear off the floor by lifting at the ends of the hotplate fascia.
Do not move by pulling the door handle or knobs.

Move the cooker a bit at a time, checking behind it to make sure that the gas hose has sufficient slack to allow the cooker to move forward as you go along.

When you replace the cooker, again check behind to make sure that the gas hose or cable are not caught or trapped.
Take care not to twist it within the gap between the kitchen units as damage may occur to the cooker or the units.

Check that the cooker stability chain has been reconnected.

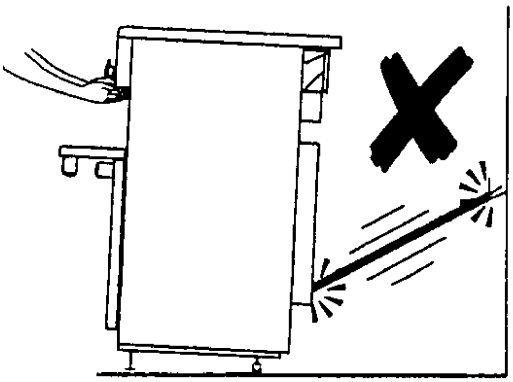

preparation and burning off

Important for asthmatic sufferers

Before using for the first time, protective coatings need to be burnt off. Fumes will be emitted but this is quite normal.

Ensure the room is very well ventilated during the burning off process. Avoid directly inhaling the fumes during this process.

Grill

Open the grill door. Remove wire rack, baking tray and handle, and set the control to 3 for about 15 minutes.

Oven/s

Remove shelves and baking tray and turn the oven control knobs to 200°C for about 15 minutes.

Cleaning

Before you start using your cooker, clean the appliance as recommended under Care and cleaning on page 19.

gas connection

Gas supply

Your oven must only be used on natural gas or LP gas.

Natural Gas

The cooker is designed for UK and Ireland installation using a flexible connection with tubing in accordance with the regulations in force. Length of 900mm is recommended (Ireland 600 mm).

LP Gas

For flexible connections use a bayonet type hose, suitable for use on LP Gas up to 50 mbar pressure rise. The flexible hose should be coloured black with a red stripe, band or label.

Gas flexible hose

If a flexible hose is used it must not come into contact with the top 150mm/6 inches (the shaded area on the diagram) of the rear of the appliance.

Do not pass the hose through the hot region behind the oven.

Connection

Connect the flexible gas hose to the oven as follows.

1. Use nonsetting gas sealant on the connection to the cooker.
2. Connect to the gas supply pipe at the rear of the cooker (1/2 in BSP).
3. Assemble burner caps and rings fit pan supports in position. (left and right sides)
4. Turn on the gas supply and check for soundness.
5. Light two burners and check that the pressure is correct.

Gas leaks

If you smell gas, turn off all gas controls and extinguish any open flame. Open a window to ventilate the room. Don't touch any electrical switches. Contact your local Gas Supplier immediately.

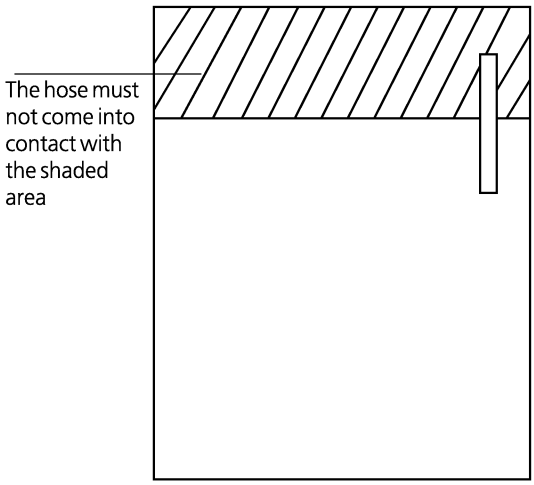

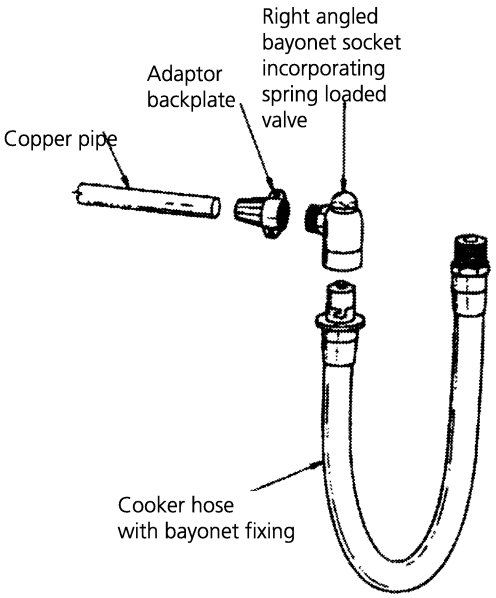

Ensure that the local distribution and adjustment conditions are compatible.
Check the rating plate to identify cooker preset condition.

Conversion from natural gas to LPG

The conversion must only be implemented by a qualified engineer.

1. Replace the natural gas orifices by the LPG equivalents.
2. Check gas soundness.
3. Remove the control knobs.
4. Adjust the reduced rates of the burners.

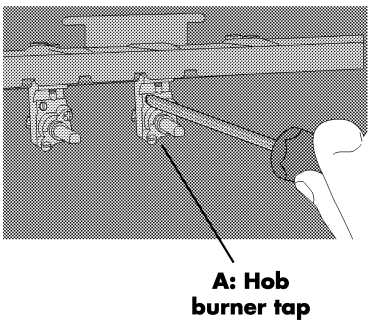

A. Hob burners

* Adjust screw **"A"** 1-1 1/2 turns clockwise to obtain flame length of about 5 mm.
* Adjust each burner separately.

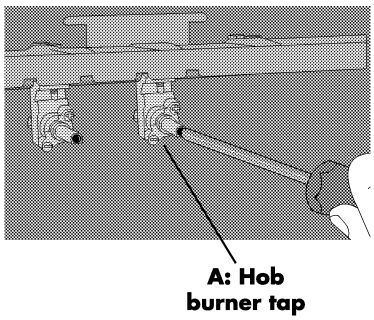

A. Hob burners

* Adjust screw **"A"** 1-1 1/2 turns clockwise to obtain flame length of about 5 mm.
* Adjust each burner separately.

5. Apply the following labels;
* Overstick current rating plate with modified cut out label ensuring serial number is still visible.
* Tick appropriate LPG gas box and fix adjacent to the rating plate label.

Conversion from LPG gas to NG

The conversion must only be implemented by a qualified engineer.

1. Replace the gas orifices by the NG equivalents.
2. Check gas soundness.
3. Remove the control knobs.
4. Adjust the reduced rates of the burners.

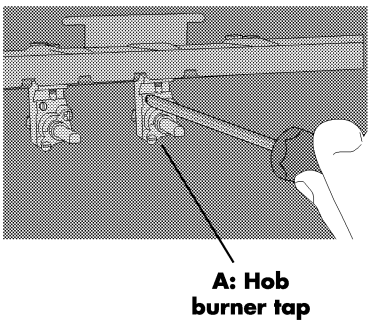

A. Hob burners

* Adjust screw **"A"** 1-1 1/2 turns anti clockwise to obtain flame length of about 5 mm.
* Adjust each burner separately.

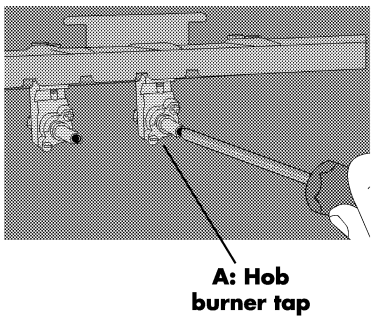

A. Hob burners

* Adjust screw **"A"** 1-1 1/2 turns anti clockwise to obtain flame length of about 5 mm.
* Adjust each burner separately.

5. Apply the following labels;
* Overstick current rating plate with modified cut out label ensuring serial number is still visible.
* Tick appropriate NG gas box and fix adjacent to the rating plate label.

operating the hob

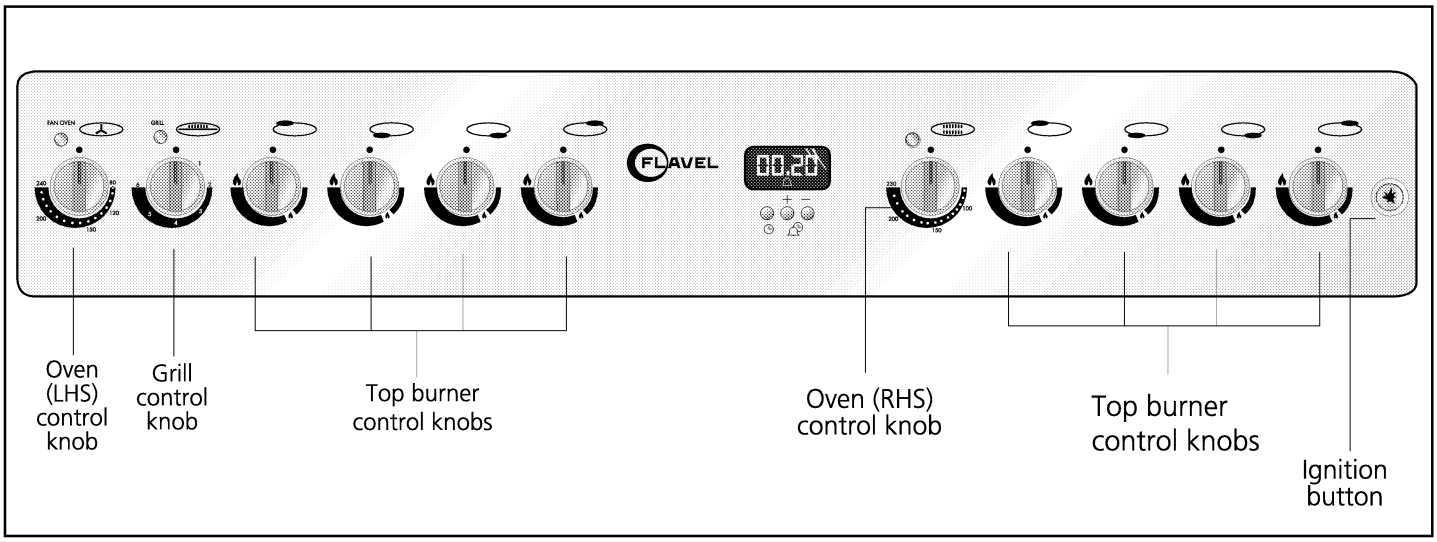

Turning on and off

Flame failure device (if available)
All burners are protected by flame failure devices, if the flames are extinguished for any reason the gas will automatically be cut off.

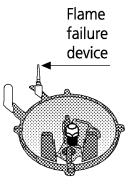

The burner control knobs have a safety feature.

1 Push the appropriate knob in slightly and turn anti-clockwise to the required setting.

2 While keeping the knob depressed press the ignition button.

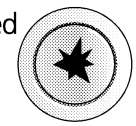

3 Keep the knob depressed for 15 seconds after the burner has lit to override the safety device.

4 To switch a burner off turn the corresponding knob to ●.

- Turning the control knob fully anti-clockwise to the small flame symbol enables you to simmer without accidently switching off.

Ignition button

- Pressing this button provides a spark at all burners, only the one turned on will light.
- If a hob burner doesn't light, press again until it does.

Flame control

- When turning on a hotplate burner, stay and make sure that it has lit, and adjust the flame immediately .
- **Selection of the correct flame height is especially important to safety.** Adjust the burner flame so that it does not extend beyond the bottom of the pan, any higher and the flame becomes inefficient and can be a potential fire hazard.
- To make sure that the cooker is operating safely, periodic checks are advised.
- At low settings, do not leave the burners unattended for long periods of time.
- The burner flames should burn with a visible bluish cone within the main flame, and with no sign of yellowness. If at the first lighting they are very noisy and yellow, turn out at once and check that the burner cap has been correctly replaced. If on re-lighting there is no improvement, ask your supplier to check them. The inner portions of the flames as described above may not be very clear, but this is not detrimental in anyway.

The pan supports are not interchangable.

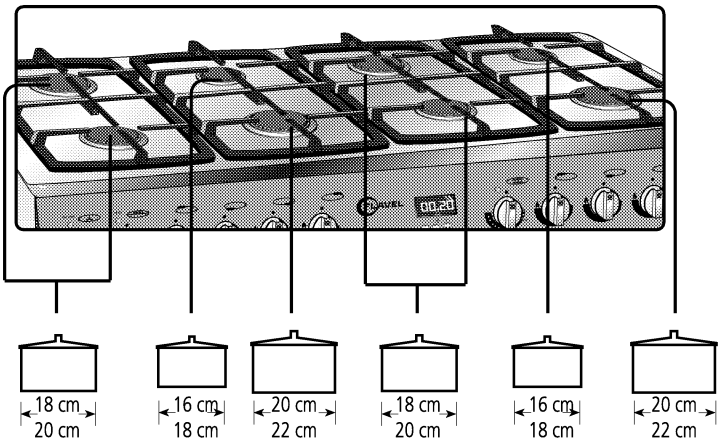

Pan choice

In choosing pans, look for pan handles that can be held easily and will stay cool. Avoid pans that are unstable and easily tipped. Pans that are too heavy to move easily when filled can also be a hazard. Only use flat bottomed pots or pans.

Pan size

For maximum efficiency and safety, use the recommended pan sizes for each burner.

- Use pans which have sufficient capacity for the amount of food being cooked so they don't boil over and cause unnecessary cleaning.
- Do not place lids on the burners.

Always position pans centrally over the burners. When transferring pans from one burner to another always lift the pans do not slide them.

deep fat frying

- Never fill the pan more than the one-third full of fat or oil.
- Never leave unattended during heating or cooking.
- Do not fry too much food at the same time especially frozen food. This only lowers the temperature of the oil or fat too much resulting in greasy food.
- Always dry food thoroughly before frying and lower it slowly into the hot oil or fat. Frozen foods in particular will cause frothing and spitting if added too quickly.
- Never heat fat or fry with a lid on the pan.
- Keep the outside of the pan clean and free from streaks of oil or fat.

In the event of a chip pan or other pan fire

1. Turn off the cooker.
2. Smother flames with a fire blanket or damp cloth.
3. Do not try to remove a burning pan from the hob.

Burns and injuries are caused almost invariably by picking up the burning pan and rushing outside with it.

Do not use water on the fire.

Leave the pan to cool for at least 30 minutes.

Don't touch the heating elements or other parts that may become hot when the grill is in use - children must be kept away!

A switch operated by the door controls the grill element. When the door is open, the top element is activated for intense downward heat; when the door is closed, the grıll elment is switched off. Do not use the door to switch the grill off and on.

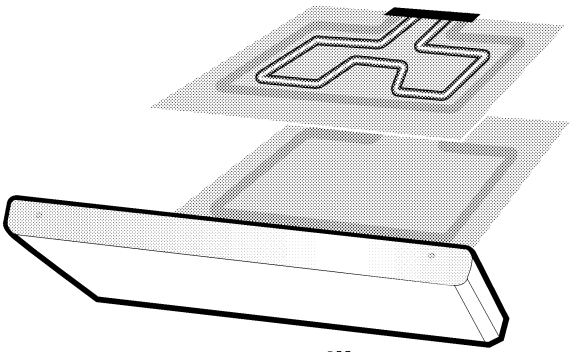

As a grill
door open

Using the grill

When the door is fully open, it remains tilted slightly, so that any spillage will be directed away from you.

1 Open the door.

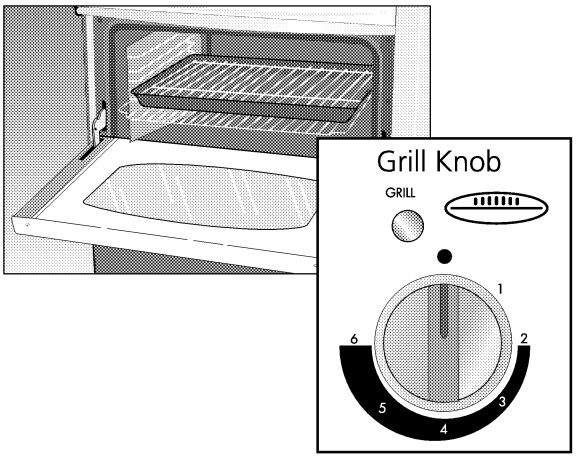

2 Turn the grill on by turning the control knob to position 6 and allow to preheat for around 5 minutes.

3 Rotate the grill control knob to the required setting 1 to 6 (6 = High).

4 Then choose the desired setting.

- **Only use the middle and bottom rack position for grilling. Do not use the top position.**
- Ensure the food is correctly positioned under the grill element.
- Food which requires browning only should be placed under the hot grill, either in the grill pan, or on the floor of the grill compartment, according to the depth of the dish. The grill pan wire grid can be removed.
- Do not line the grill pan with aluminium foil. This will result in increase in temperature and risk of fire.
- Plates and dishes placed on the floor of the grill compartment will be heated when the main oven is in use.
- Do not switch on the grill when using the compartment for storage.

Use of grill pan handle

Warning! Always use an oven glove to protect your hand when using the grill as all metal parts can become very hot.

The grill pan has a detachable handle. Make sure the handle is securely located between the raised profiles across the front of the grill pan. See the diagrams for fitting the handle. To remove the handle, reverse the sequence of operations.

Always take care not to touch hot surfaces when using the grill pan handle. Ensure when using the grill pan handle that it is centralised and secure. Do not leave the handle in position when grilling. If the handle is left in position when grilling, it will get very hot.

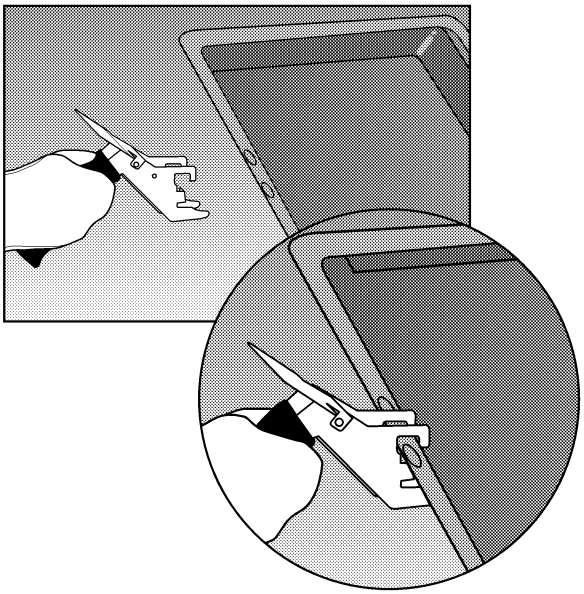

Grilling guidelines

For thicker foods requiring longer cooking, turn the control to a lower setting after the initial sealing on both sides. The thicker the food, the lower the control should be set. When grilling thicker food, the grill rack should be turned over to its lowest position.

Food	Grill Setting	Approximate Cooking time
Toasting of Bread products	6	3 - 10 mins.
Small cuts of meat, sausages, bacon, etc.	5 - 6	15 - 20 mins.
Chops etc. Gammon steaks Chicken pieces	5 - 6	20 - 25 mins. Wire food support used in upturned position for chicken.
Fish: Fingers Whole Fillets	5	10 - 20 mins. Whole fish and fillets placed in the base of the grill pan.
Fish in breadcrumbs	5	15 - 20 mins.
Pre – Cooked potato products	5	15 - 20 mins.
Pizzas	5	12 - 15 mins. in the base of the grill pan.
Browning of food	6	8 - 10 mins. Dish placed directly on the base of the grill compartment

operating the conventional oven (RHS)

The two ovens in your cooker are of different types. The left hand oven is a fan oven. The fan circulates the warm air which results in faster heat transfer to the food.

The right hand conventional oven is fitted with two heating elements, one is visible in the top of the oven and the second element under the oven base.

All surfaces get hot during use. Take care to avoid touching the top element and deflector when placing or removing items from the oven.

The storage compartment becomes hot when the oven is operating. Do not store flamable materials or liquids in the storage compartment.

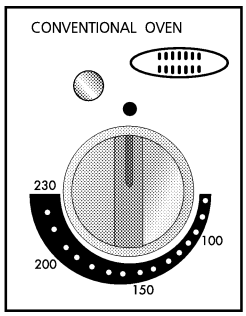

1 Turn the oven on by rotating the oven control knob clockwise.

2 Select the temperature in the oven by selecting the temperature (in degrees Celsius) printed on the control panel.

3 The amber temperature indicator light on the control panel will glow until the pre-set temperature set is reached.

4 Once the temperature has been reached, the amber light will go off and then cycle on and off to maintain the pre-set temperature.

Ensure you stand back from the appliance when opening the oven door to allow any build up of steam or heat to escape.

- Check food is thoroughly cooked and is piping hot.
- When cooking using both shelves, rotate the food to ensure even cooking/baking results.

Oven temperature chart

This chart is for guidance only, follow food manufacturers recommendations whenever available.

Food	Cooking temperature °C	Time	Shelf position
Beef	180-190	30 mins per 450g + 30 mins	2
Lamb	180-190	30 mins per 450g + 30 mins	2
Pork	170-180	40 mins per 450g + 40 mins	1-2
Poultry	180-200	25-30 mins per 450g + 25 mins	1-2
Casseroles	140-160	1.5-2 hours dependent on quantity	1-2
Fruit cake	140-160	Time dependent on size	2-3
Small cakes	160-180	20-25 mins	4
Victoria sandwich	160-180	20-25 mins	1

Temperature conversion

The oven temperature control knob is marked in degrees Celsius (sometimes called Centigrade). This chart will help when recipes show °F or use descriptive terms (as recommended by the Association of Manufacturers of Domestic Electrical Appliances).

Description	**Celsius °C**	Fahrenheit °F
Cool	70	150
	80	175
	100	200
	110	225
Slow	120	250
	140	275
	150	300
Fairly hot	160	325
	180	350
Hot	190	375
	200	400
Very hot	220	425
	230	450
	250	480

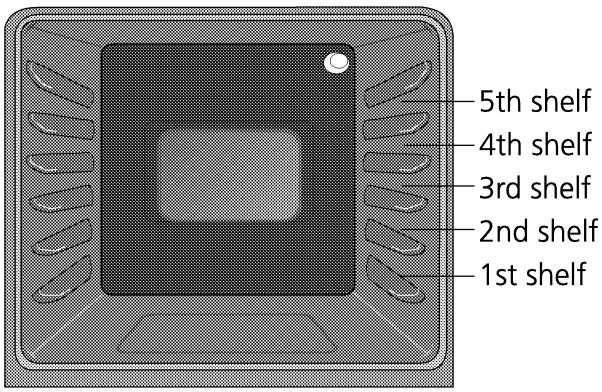

1 Turn the oven on by rotating the oven control knob clockwise.

2 Select the temperature in the oven by selecting the temperature (in degrees Celsius) printed on the control panel.

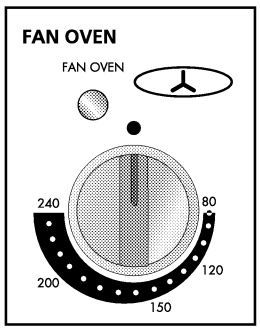

3 The amber temperature indicator light on the control panel will glow until the pre-set temperature is reached.

4 Once the temperature has been reached, the amber light will go off and then cycle on and off to maintain the pre-set temperature.

Ensure you stand back from the appliance when opening the oven door to allow any build up of steam or heat to escape.

- Check food is thoroughly cooked and is piping hot.
- As a fan oven heats up more quickly and generally cooks food at a lower temperature than a conventional oven, preheating the oven is often unnecessary. However, food such as bread, scones, Yorkshire pudding, do benefit from being placed in a pre-heated oven.

Fan oven temperature chart

This chart is for guidance only, follow food manufacturers recommendations whenever available.

Temperature conversion

The oven temperature control knob is marked in degrees Celsius (sometimes called Centigrade). This chart will help when recipes show ºF or use descriptive terms (as recommended by the Association of Manufacturers of Domestic Electrical Appliances).

Description	**Celsius ºC**	Fahrenheit ºF
Cool	70	150
	80	175
	100	200
	110	225
Slow	120	250
	140	275
	150	300
Fairly hot	160	325
	180	350
Hot	190	375
	200	400
Very hot	220	425
	230	450

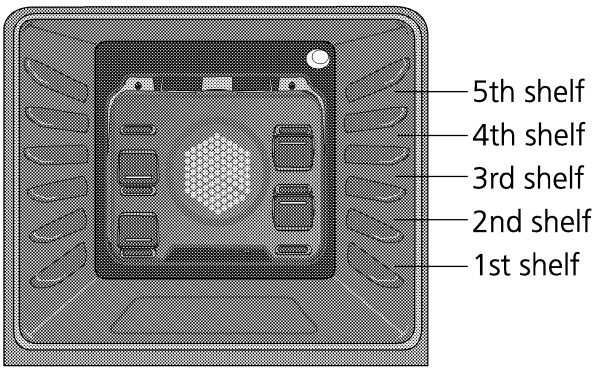

Food	Cooking temperature ºC	Time	Shelf position
Beef	160-180	20-25 mins per 450g +20 mins	2
Lamb	160-180	25 mins per 450g + 25 mins	2
Pork	160-180	25 mins per 450g + 25 mins	1-2
Poultry up to 4kg (8lbs)	160-180	18-20 mins per 450g + 20 mins	1-2
Poultry up to 5.5kg (12lbs)	150-160	14-16 mins per 450g + 20 mins	1-2
Casseroles	140-150	1.5-2 hours dependent on quantity	1-2
Fruit cake	130-140	Time dependent on size	2-3
Small cakes	160-180	15-25 mins	4
Victoria sandwich	160-180	20-25 mins	1

Tips for cooks

Always leave a ‘fingers width’ between dishes on the same shelf. This allows the heat to circulate freely around them.

To reduce fat splashing when you add vegetables to hot fat around a roast, dry them thoroughly or brush lightly with cooking oil.

If you want to brown the base of a pastry dish, preheat a baking tray for 15 minutes before placing the dish in the centre of the tray.

Put dishes which may boil and spill over during cooking, on a baking tray.

The wire shelves should always be pushed firmly to the back of the oven.

Baking trays with food cooking on them should be placed level with the front edge of the ovens’s wire shelves. Other containers should be placed centrally.

Keep all trays and containers away from the back of the oven, as overbrowning of the food may occur.

For even browning, the maximum recommended size of a baking tray is 350x275mm.

When the ovens are on, don’t leave the door open for longer than necessary, otherwise the knobs may get very hot.

operating the clock/minute minder

To set the time of day

The clock display uses the 24 hour system, ie 8:30pm = 20:30.

1 Check that the electricity supply is switched on.

2 When switched on the display will show 0.00 flashing.

3 Press ◷ and then press either **+** or **-** to set the correct time of day.

- If the electricity supply has been off, **+** must be pressed once before **-**, if it is required to reduce the time of day.

4 Hold the ◷ button until the hours display will flash. Change the hours only by using the **+** or **-** button. The minutes and hidden seconds will not be affected.

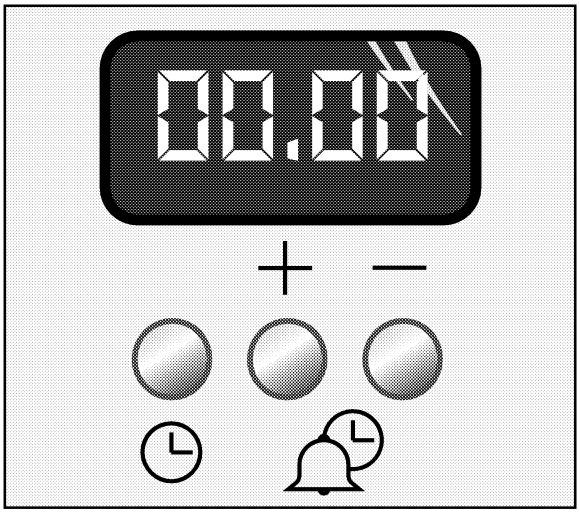

To set the minute minder

1 Press **+** until the required time is set. A bell symbol will light up.

- During setting the time adjusts in 10 second intervals up to a maximum of 99 minutes 50 seconds.
- It can also be adjusted by pressing **-**.

2 At the end of the set time, a bleeping sound will be heard and the bell symbol will disappear.

- The bleeper can be cancelled by pressing **+**.
- If necessary the minute minder can be cancelled before the bleeper sounds by pressing - until 0.00 appears.

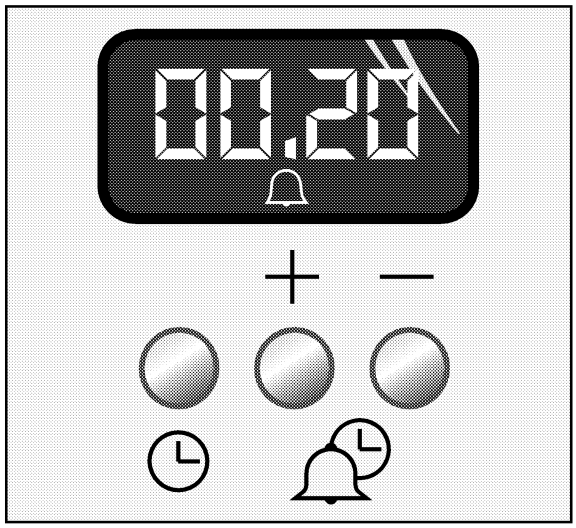

Bleeper sound

To adjust the pitch of the bleeper, press **-**while the bleeper is sounding as follows.

1 Press **+** and set 10 seconds.

2 When the bleeper sounds, press and release **-** until the preferred pitch is set.

3 Press and release **+** to cancel the bleeper.

Turn OFF at the mains before cleaning.

- Before switching on again ensure that all gas controls are in the OFF position.
- **Make sure that the oven, grill and burners are sufficiently cool before you start cleaning.**
- A residual heat will remain after you switch off the cooker so take care not to touch hot surfaces.

Exterior

Use a damp cloth to clean the outside. Never use any sharp instruments, abrasive household cleaner, or detergents for cleaning. For hard stains use suitable washing liquid.

Burners

The pan supports can be removed and the top burner plate can be cleaned with soapy water and rinsed with a dry cloth.

Wash and rinse the gas burner caps and the pan supports with soapy water. Never wash them in a dishwasher. For the dirt and stains on the burner heads that does not wash off, use a proprietary metal surface cleaner.

Hob surround

Clean with a cloth wrung out in soapy water. Stubborn stains can be removed with a cream, paste or liquid cleaner. Check that the cleaning agent used is approved by the Vitreous Enamel Development Council.

Control panel

Wipe over the control panel with a damp cloth and polish with a dry cloth. Do not use oven cleaners or aerosol sprays, scouring pads or abrasive powder for cleaning the plastic knobs or end caps as damage will occur. Take extreme care when removing and re-fitting control knobs. Never operate the appliance without all control knobs fitted. The correct control knob must be fitted to the corresponding control.

Grill and oven interiors

Take out all trays and pans. Clean out the interior with a piece of moist, soapy cloth. Then, clean it once more with a wet piece of cloth and leave it to dry.

We recommend that grill elements be wiped with a damp cloth to remove any fat splashes. This will prevent fumes from any fat being burned off when the cooker is next used.

Never clean the inside of the grill or oven and trays with hard brushes, steel pads or knives.

Do not use cleaning agents containing acid or chlorine on the handle. Cleaning can be performed using a soft piece of cloth and soapy water or commercially available special surface cleaners.

Grill and oven doors

Wipe over the door outer panel with a cloth wrung out in hot soapy water, then after wiping with a cloth wrung out in clean water, dry with a soft clean cloth. Do not use scouring pads or abrasive powder which may scratch the surface. Take care during cleaning not to damage or distort the door seal.

Ensure that the door seal is dry after cleaning. Do not lift the door seal.

Models with removable inner glass panels

When you wish to clean the interior glass of the oven door, use a screwdriver to remove the top and bottom washers that secures the interior glass to the door, remove the glass with care.

Clean as above, but do not use house hold detergents, bleach, scouring pads or rust removers. After drying, position the gasket back into its place, reinstall the glass panels carefully preventing sudden shocks.

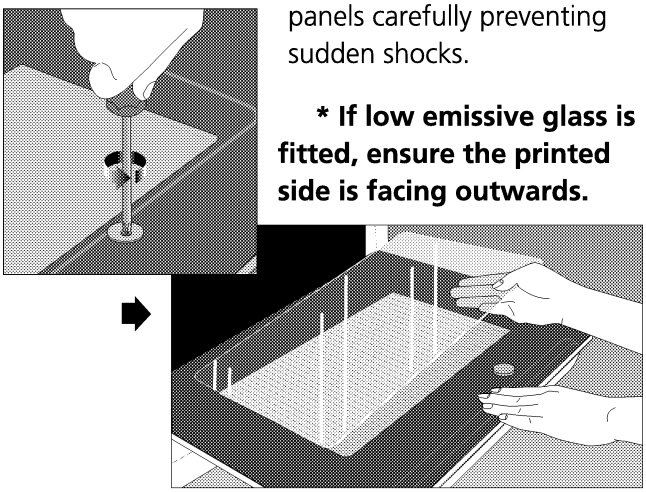

*** If low emissive glass is fitted, ensure the printed side is facing outwards.**

Over time...

- Slight discolouration of liners and other surfaces may occur in time. This does not affect the functioning of the appliance.

*** Model dependant.**

trouble shooting

If the cooker does not work

If the appliance does not operate check whether:

- The power supply is on.
- The fuse has blown/circuit breaker has tripped/main distribution switch has been turned off.
- The temperature control has been set correctly.
- The main oven will not operate if the clock has not been set.
- This cooker must be earthed if in doubt consult a qualified electrician.

If the appliance is still not operating after the above checks, please refer to the section on how to obtain service.

Please ensure that the above checks have been made as a charge will be made if no fault is found.

Performance characteristics when in use

- **When using your appliance for the first few times, an odour and/or smoke may be emitted which is normal** - see page 8.
- It is normal for the metal parts to produce noise when in use, this is due to expansion and contraction.
- When in use, steam may be produced which is normal and not a fault of the cooker.
- At the end of a cooking session, it is normal to have a momentary puff of steam when the oven door is opened. This should disperse in a few seconds.
- If, whilst cooking, steam produced comes in to contact with cool surface's on the outside of the appliance, it will condense and produce water droplets. This is quite normal and is not a fault.

replacing the oven lamp

Warning:

Ensure the appliance is switched off at the mains before replacing the lamp to avoid the possibility of electric shock.

Switch off at the mains.

1. Remove the glass cover of the lamp by turning it anti-clockwise.
2. Remove the bulb by turning it anti-clockwise.
3. After installing the correct bulb, reinstall the glass cover.

Replacement light bulbs can be easily obtained from a good local electrical or DIY store.

future transportation

Keep the original carton and other packaging material in a safe place. Transport the cooker in its original carton. Follow the instructions that are printed on the carton.

To prevent the accessories inside the oven from damaging the oven door, tape a strip of cardboard onto the inside of the oven door that lines up with the position of the trays. Tape the oven door to the side walls.

If you do not have the original carton

Take the necessary precautions in order to prevent the exterior panels, and the glass surfaces of the oven from being damaged.

Pack the oven in bubble wrap or thick cardboard and tape it securely in order to prevent damage during transportation.

The oven must be transported upright. Do not place other items on the top of the cooker.

guarantee

Your Cooker is guaranteed against the cost of breakdown repairs for twelve months from the date of the original purchase.

What is covered?

- Repairs necessary as a result of faulty materials, defective components or manufacturing defects.
- The cost of functional replacement parts, but excluding consumable items.
- The labour cost of a Leisure Consumer Products approved repairer to carry out the repair.

What is not covered?

- Transit, delivery or accidental damage or misuse and abuse.
- Cabinet or appearance parts, including knobs, flaps, handles or container lids.
- Accessories or consumable items including but not limited to filters and light bulbs.
- Repairs required as a result of unauthorized repair or inexpert installation that fails to meet the requirements contained in the user instruction book.
- Repairs to products used on commercial or non-residential household premises.

Important notes

- Your Leisure Consumer Product is designed and built for domestic household use only.
- The guarantee will be void if the product is installed or used in commercial or non-residential domestic household premises.
- The product must be correctly installed, located and operated in accordance with the instructions contained in the User Instruction Booklet provided.
- Professional installation by a qualified Electrical Domestic Appliance Installer is recommended for all Washing Machines, Dishwashers, Electric Cookers and Cooker Hoods.
- Gas Cookers must only be installed by a CORGI (or BORD GAIS) registered Gas Installer.
- The guarantee is given only within the boundaries of the United Kingdom and the Republic of Ireland.
- The guarantee is applicable only to new products and is not transferable if the product is resold.
- Leisure Consumer Products disclaims any liability for incidental or consequential damages.
- The guarantee does not diminish your statutory or legal rights.

Please keep your purchase receipt or other proof of purchase in a safe place; you will need to have it should the product require attention under guarantee.

You should also complete the details below; it will help us assist you when requesting service. (The model is printed on the Instruction Booklet and Serial Number is printed on the Rating Label affixed to the appliance)

Model No: _____ Serial No: _____

Retailer: _____ Date of purchase: _____

For service under guarantee simply telephone the appropriate number below

UK Mainland & Northern Ireland		**Republic of Ireland**	
Fridges & Freezers	0845 600 4903	All Refrigeration, All Cookers, Washing Machines & Dishwashers	01862 34 11
Electric Cookers	0845 600 4921		
Gas & Dual Fuel Cookers	0845 600 4921		
Washing Machines & Dishwashers	0845 600 4906		

Before requesting service please check the trouble-shooting guide in the Operating Instructions as a charge may be levied where no fault is found even though your product may still be under guarantee.

Service once the manufacturer's guarantee has expired

If you have purchased an extended guarantee please refer to the instructions contained within the extended guarantee agreement document. Otherwise please call the appropriate number above where service can be obtained at a charge.

Should you experience any difficulty in obtaining service please contact the Leisure Consumer Products Customer Help-Line.

Tel: 0845 600 4918 e-mail: service@leisurecp.co.uk

Leisure Consumer Products
36-38 Caxton Way
Watford
Herts WD18 8UF
Tel: 0845 6004916
Facsimile: 0845 6004922
www. Leisurecp.co.uk

Part no. 485.9208.59 / 12.12.2009